solis

Quick Installation Guide
Version 1.1

S6-EH3P(12-20)K-H
S6-EH3P(8-12)K-LV-H

Ginlong Technologies Co., Ltd.

Note: Installation Manual Download

For access to the manual please scan the QR code below or you can go the URL https://www.solisinverters.com/global/downloadcenter.html
After entering the page, you can click " " icon to change to preferred language.

1 Product Description

The Solis S6 Series is designed for residential hybrid systems, which can work with batteries to optimize self-consumption. The unit can operate in both off- and on-grid modes.

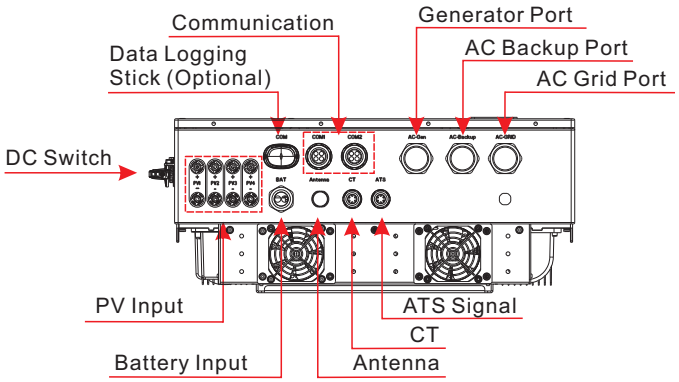

2 Installation Clearance

Minimum clearance is required.

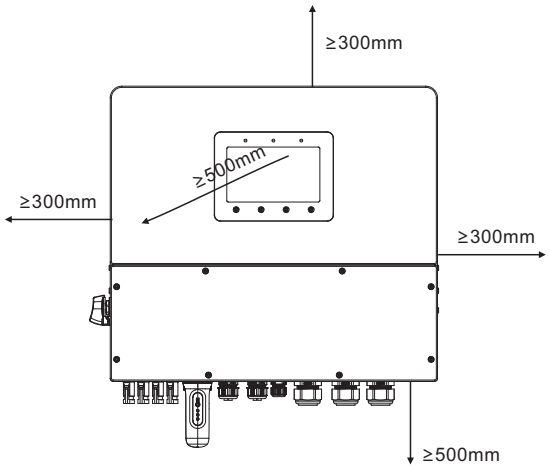

3 Mounting Hole Size

Dimensions of mounting bracket.

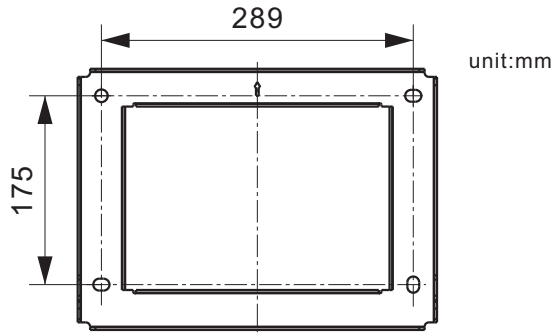

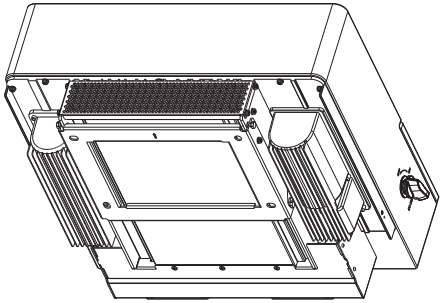

4 PE Cable Installation

An external ground connection is provided at the right side of inverter. Prepare OT terminals: M4..

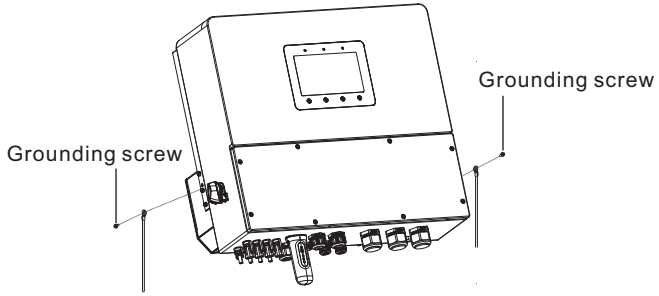

5 PV Input Cable Installation

The connector is MC4.
Please make sure the PV array open circuit voltage is within the limit of the inverter.
Please make sure the polarity of the output voltage of PV array matches the“DC+”and“DC- ” symbols.

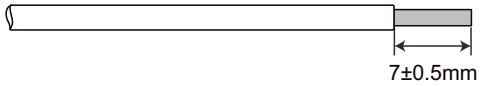

Cable type	Cross section（mm²）	
	Range	Recommended value
Industry generic PV cable (model:PV1-F)	4.0~6.0 (12~10AWG)	4.0（12AWG）

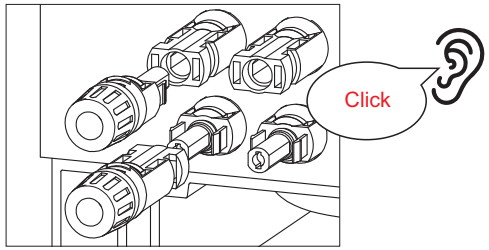

6 Battery Cable installation

Please make sure that the battery is turned off.
Use a multimeter to verify that the battery voltage is 0Vdc before proceeding.
Consult the battery product manual for instructions on how to turn it off.

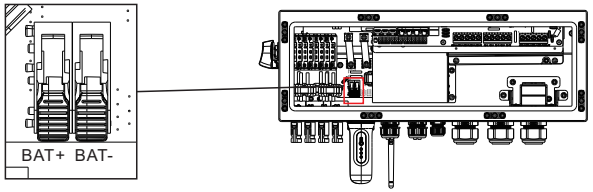

Maximum 50A charge/discharge current of the inverter.
Recommended cable: 8AWG(8.37mm²).
Strip 15-18mm off the ends of each cable.

7 AC Wring

Before installing the AC cables, be sure that the OCPDs (breakers) are turned off.
Use a multimeter to verify that the AC voltages are 0Vac before proceeding.
There are three sets of AC output terminals and the installation steps for both are the same.

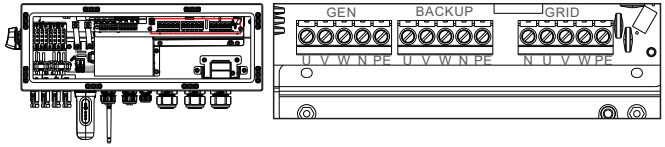

Model	AC Grid	AC Backup/AC Gen	PE
Torque	4~5N.m	4~5N.m	4-5N.m
Recommend cross section	8~6AWG (6~10mm²)	10~6AWG (4~10mm²)	6AWG (10mm²)

8 Communication

8.1 Communication Ports

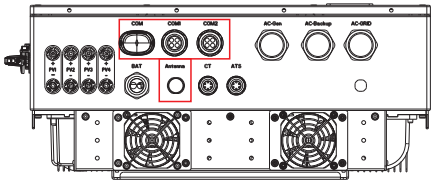

Port	Port Type	Description
COM	USB	Used for Solis data logger connection
ANTENNA	Antenna	Used for antenna connection for built in Bluetooth signal
COM1	4 hole watertight cable gland	Used for RJ45 connection inside wiring box
COM2	4 hole watertight cable gland	Used for RJ45 connection inside wiring box

8.2 Communication Terminals

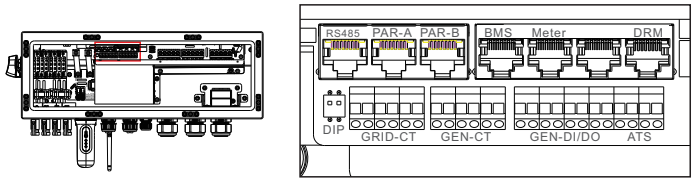

Terminal	Type	Description
RS485	RJ45	Third-party external devices.
PAR-A	RJ45	(Optional) Parallel operation communication port.
PAR-B	RJ45	(Optional) Parallel operation communication port.
BMS	RJ45	Used for CAN communication between inverter and Lithium battery BMS.
Meter	RJ45	Used for RS485 communication between inverter and the smart meter.
COM	RJ45	Reserve.
DRM	RJ45	(Optional) To realize demand response or logic interface function, this function may be required in UK and Australia.
DIP Switch (2-1)	-	When a single inverter is running, DIP switch 1 and 2 shall be both at the bottom position. When multiple inverters are paralleled, DIP switch: Option 1: Both the first and last inverter (INV1 & INV3) have 1 of the DIP switch enabled (Either Pin1 or Pin2). Option 2: One of the first and the last inverter (INV1 or INV3) has 2 DIP switches enabled (Both Pin1 & Pin2)
GRID-CT	Cable	Connect grid Cts.
GEN-CT	Reserve	
GEN	Dry contact	Connect GEN .
DI/DO	Dry contact	Connect to gen start signal A and B.
ATS	Reserve	
Pin11/Pin12	Reserve	Connect Heat Pump.

9 CT or Meter Connection

Make sure the AC cable is totally isolated from AC power before connecting the smart meter or CT.

9.1 CT connection

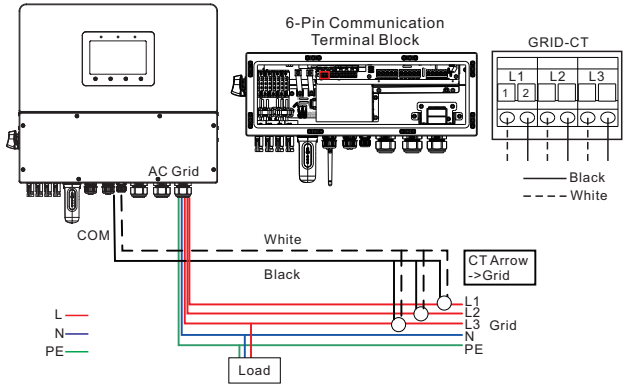

9.2 Pin definition of the Meter Terminal is following EIA/TIA 568B.

Take out the pre-made Meter cable from the package and connect RJ45 end to inverter Meter port and then connect another end with loose RS485 A & B pins to the meter RS485 terminal.
Cable Length: 5 meters.

NOTE:

Pin definition of the Meter Port is following EIA/TIA 568B.
RS485A on Pin 1:Orange/white
RS485B on Pin 2:Orange

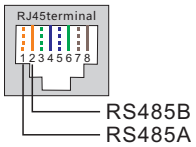

10 BMS Terminal Connection

CAN communication is supported between inverter and compatible battery models.
Please lead the CAN cable through the COM1 or COM2 port of the inverter and connect to the BMS terminal with RJ45 connector.

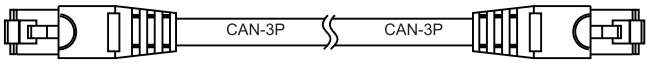

NOTE:

Before connecting CAN cable with the battery, please check whether the communication pin sequence of the inverter and the battery match; If it does not match, you need to cut off the RJ45 connector at one end of the CAN cable and adjust the pin sequence according to the pin definitions of both inverter and battery.
Pin definition of the inverter BMS Port is following EIA/TIA 568B.
CAN-H on Pin 4: Blue
CAN-L on Pin 5: Blue/White

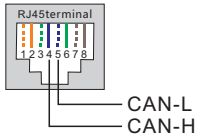

11 Parallel inverter connection (Optional)

Up to 6 units of the inverter can be connected in parallel.
Please connect the paralleled inverters by using P-A and P-B terminals.
Standard CAT5 (≤5m, between two inverter) with shielding layers internet cable can be used.

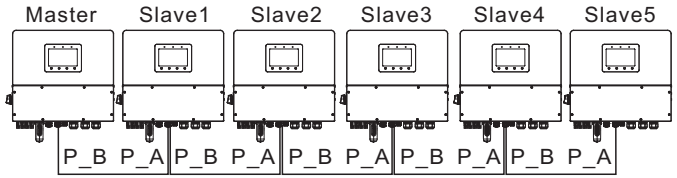

12 G-V Terminal Connection

The G-V terminal is a voltage-free dry contact signal for connecting with generator's NO relay to start up the generator when necessary.

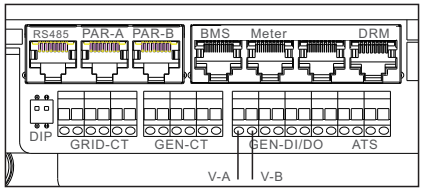

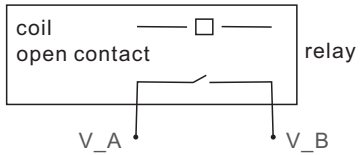

13 Inverter Overall Wiring Diagram

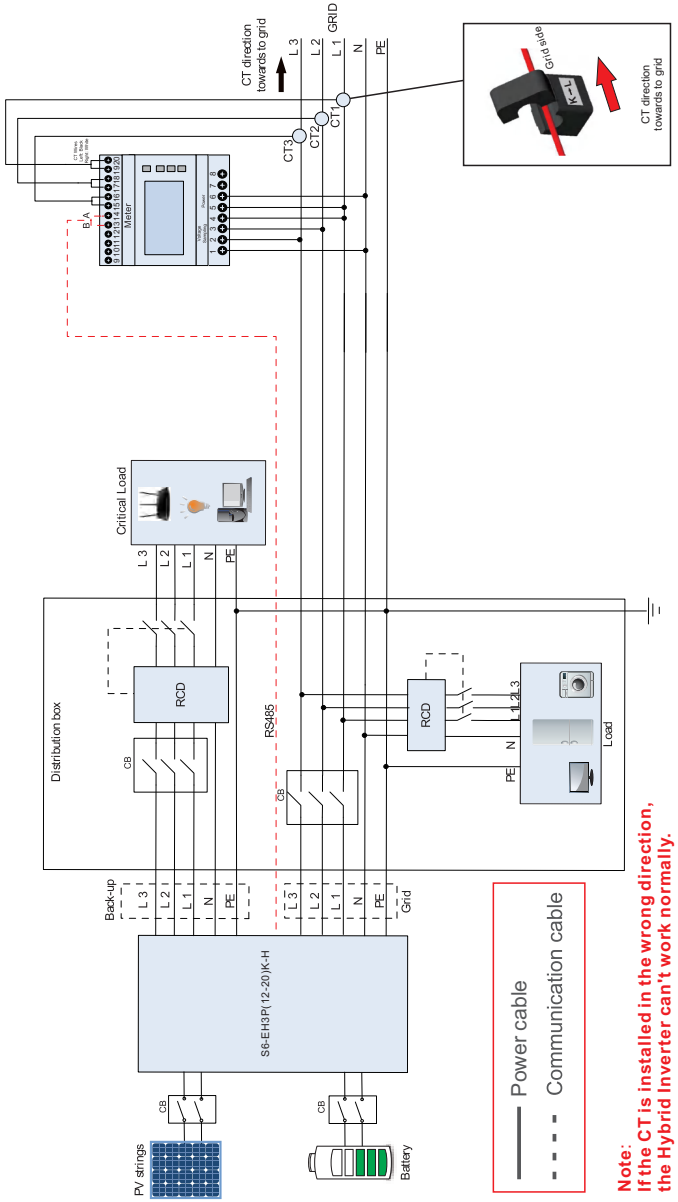

14 APP Quick Setup

Step 1: **Connect with Bluetooth.**
Turn on Bluetooth switch on your mobile phone and then open the SolisCloud APP.
Click “More Tools”->”Local Operation”->”Connect with Bluetooth”

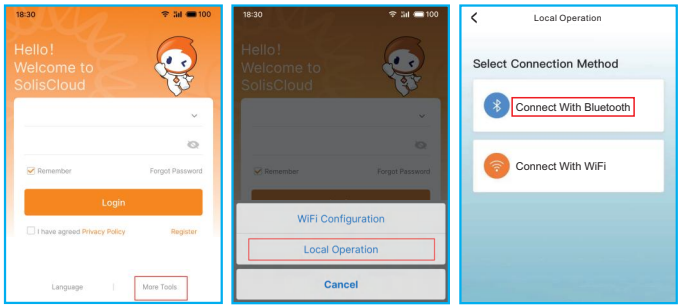

Step 2: Select the Bluetooth signal from the inverter.
(Bluetooth Name: Inverter SN)

Step 3: **Login account.**
If you are the installer, please select the account type as Installer.
If you are the plant owner, please select the account type as Owner.
Then set your own initial password for control verification.
(The first log-in must be finished by an installer in order to do the initial set up)

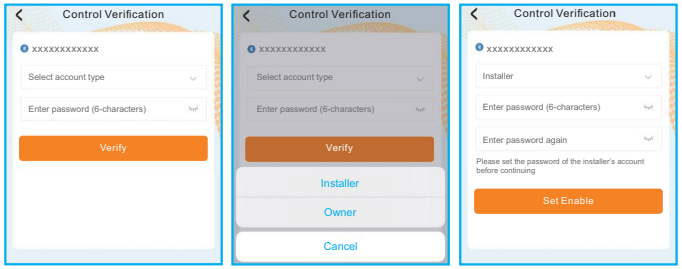

Step 4: After the log in for the first time, initial settings are required.

Step 4.1: **Set the inverter date and time.**
You can set to follow the time on your mobile phone.

Step 4.2: **Set the battery model.**
It must be based on the battery model that is actually connected to the inverter.
If there is no battery connected for the moment, please select “No Battery” to avoid alarms.
The default setting for battery over discharge SOC is 20%, force charge SOC is 10%.

Step 4.3: **Set the meter setting.**
It must be based on the meter type that is actually connected to the inverter.
If the grid does not need to be connected to an N-Line, select disconnected.
If there is no meter connected for the moment, please select “No Meter” to avoid alarms.
It is suggested to install the meter at the system grid connection point and select “Meter in Grid”.

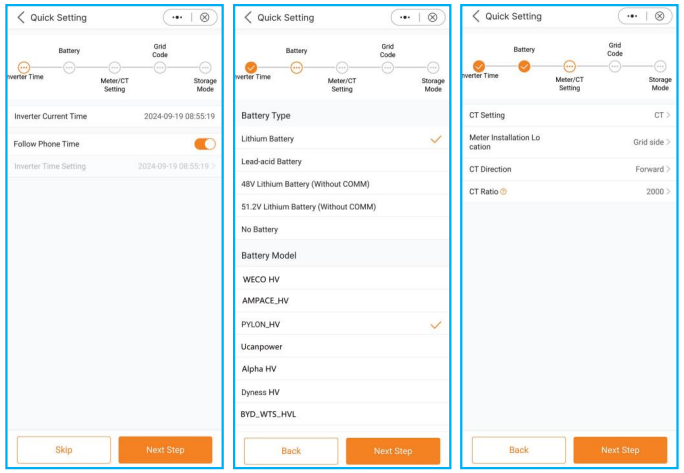

Step 4.1 Step 4.2 Step 4.3

Step 4.4: **Set the grid code setting.**
Please select the grid code based on the local grid network requirements.

Step 4.5: **Set the work mode setting.**
Recommended setting is Self-Use Mode. This mode will maximize the use of PV power generation for household electricity, or store it in batteries and use it for household electricity.
Allow export: Allow power output to the grid in Self-use mode.
If you do not want to send power to the grid, do not turn it on.
Max export power: Limit the maximum power sold to the grid.

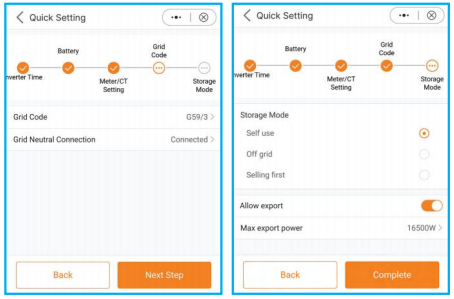

Step 4.4 Step 4.5

Step 5: **Setup complete.**
Now the initial settings on the inverter have been set and you can switch on the inverter’s DC switch and switch on battery breaker to start up the system. You can also explore in the APP to check the operating data, alarm message or other advanced settings.

15 Completion

You have finished the initial installation.

You may use the Soliscloud APP to link the datalogger to your local router. Please refer to the datalogger installation manual for the detailed configuration.

16 Contact us

Ginlong Technologies Co., Ltd.
No. 57 Jintong Road, Binhai Industrial Park,
Xiangshan, Ningbo, Zhejiang, 315712, P.R.China.
Tel: +86 (0)574 6578 1806
Email: info@ginlong.com
Web: www.solisinverters.com