USER MANUAL

3/3 ON LINE UPS
10~200KVA

Uninterruptible Power Supply

Version: 1.9

Content

1. Introduction 1
1.1 Overview 1
1.2 Basic structure 1
1.3 Working mode 1
1.4 Overview 5
2. Important Safety Warning 6
2.1 Conventions and used symbols 6
2.2 Safety instructions 7
3. Installation 10
3.1 Basic requirement 10
3.2 Disassembling and moving 11
4. Electrical connection 13
4.1 Power connection 13
4.2 Communication 17
5. Commissioning 21
5.1 Start up procedure 21
5.2 Shutdown procedure 21
5.3 Maintenance bypass operation 22
6. Interface 22
6.1 Control panel 22
6.2 LCD information 23
6.3 Sub-menus 25
7. Maintenance 45
7.1 System maintenance 45
7.2 Battery maintenance 45
8. Trouble shooting 46
8.1 Warning code 46
8.2 Fault code 47
9. Specification 48
10. Parallel Installation Guide 51
10.1 Introduction 51
10.2 Parallel Kit Overview 52
10.3 Setting and LCD display 55
10.4 Specification 56
10.5 Trouble shooting 57

1. Introduction

1.1 Overview

This UPS series is a double conversion system with sinewave output. It supplies continuous, stable, clean power for commercial and industrial environments. When the utility is lost accidentally, the UPS system will use the power from battery to output without interruption.

This system is applied an advanced digital controller to control the double conversion system, and with an isolated transformer at the output to protect the load and the UPS itself. The UPS is also built-in user-friendly LCD interface and multiple communications including Modbus, RS-232 and intelligent slot. With free download software, this UPS provides complete power solution of monitoring and controlling remotely.

1.2 Basic structure

The whole system consists of REC module, INV module, static bypass, maintain bypass and battery controller. The output of the UPS are switched over to either line input or bypass input with two SCRs operated in parallel. The basic structure is shown as below:

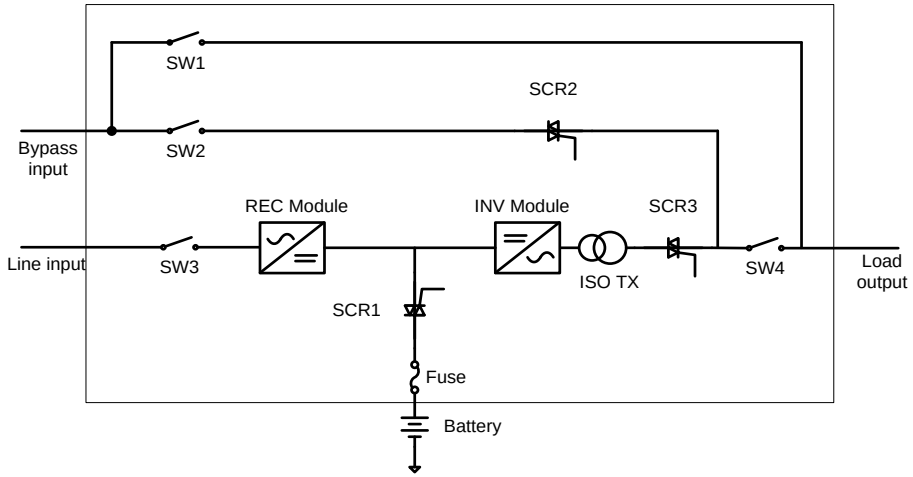

1.3 Working mode

This part will introduce the working mode of the UPS system.

1.3.1 Line mode

When the UPS is working in line mode, the AC input will be rectified by REC module, and then be converted to the output via INV module. Meanwhile, the battery is being charged. At this time, static bypass is in standby.

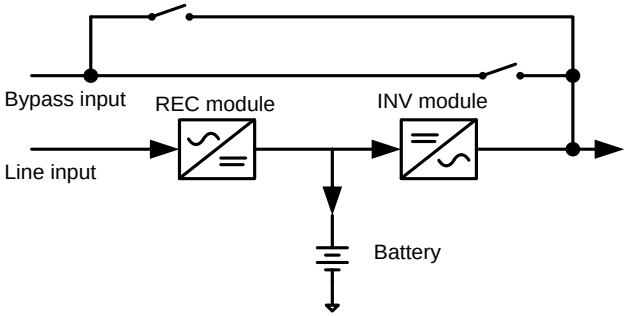

1.3.2 Battery mode

When the utility fails, the UPS will transfer to battery mode without interruption. The UPS converts the power from battery to output. At this time, static bypass is still in standby. If the utility is recovered, the UPS will transfer back to line mode again.

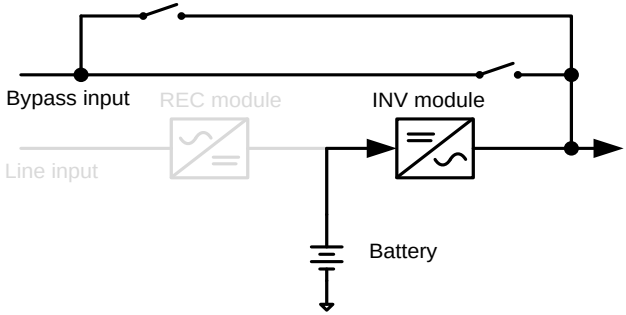

1.3.3 Static bypass mode

Bypass mode can be enabled or disabled by user setting. The default setting is enabled. The UPS system will work in bypass mode when the following conditions occur.

- The UPS system doesn’t turn on.
- The UPS is overload in line mode.
- The rectifier or inverter module is abnormal.
- The utility fails and the battery is discharged to low level.

When above mentioned situation is eliminated, the UPS will transfer back to line mode or battery mode.

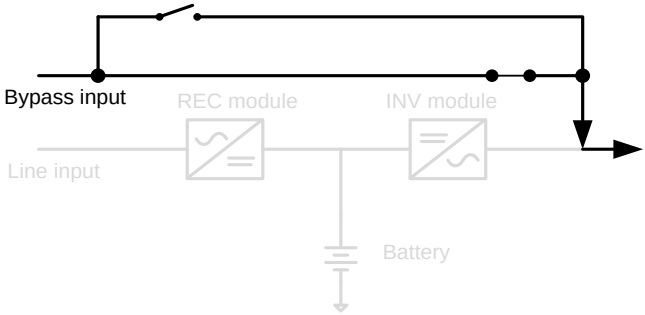

1.3.4 ECO MODE

ECO mode can be enabled or disabled by user setting. The default setting is disabled. If it's required to have high efficiency performance instead of the high power quality, it's better to enable "ECO mode".

In this mode, load will be supported via Bypass input when utility quality is OK. And the Line input will still be operated to charge battery and INV module is in standby status with switch opened. When Bypass input is lost, the system will transfer to line mode or battery mode and the transfer time is less than 10ms. When Bypass input is restored, the system transfers back to bypass mode again. This ECO mode operation greatly improves system efficiency.

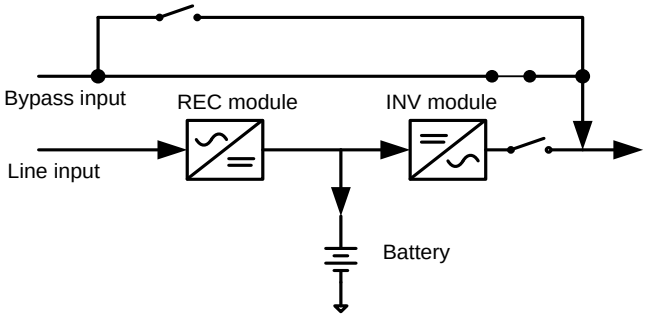

1.3.5 Maintain bypass mode

When the UPS needs maintenance and load needs uninterruptible power, the users can firstly transfer the inverter to bypass mode, and then switch on maintain bypass breaker. After that, switch off all other breakers and switches. In this condition, the utility can still power the load and users can maintain the UPS.

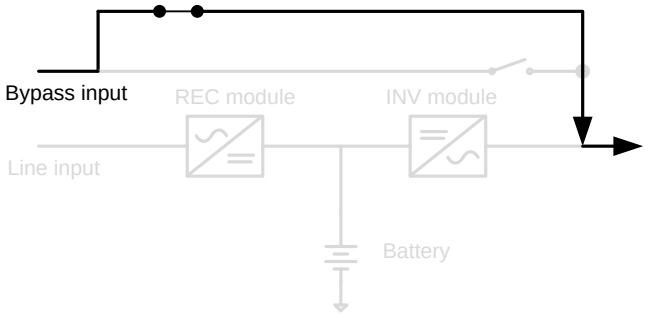

1.3.6 Other modes

Except mentioned modes above, there are standby mode, power-off mode and fault mode.

There is no output in standby mode, but the utility will charge battery. If the UPS stays in standby mode for a while without utility and load connection, the UPS will transfer to power-off mode. At this time, the UPS can't be turned on by pressing ON button. Please kindly wait for 5 minutes to allow UPS completely off itself. After 5 minutes, UPS can be restarted by pressing ON button.

The UPS will transfer to fault mode if a fault occurs in the UPS. When some minor faults occur, the UPS still can transfer to bypass mode if bypass input is available. When some severe faults occur, it won't be eliminated until the users restart the UPS. Now, it's not necessary to turn off and restart the UPS to clear fault code. Simply follow section "6.3.3" to exit fault mode through LCD operation.

1.3.7 Dual input source

The line input and bypass input are separated routes in this UPS. Users can apply different power sources into these two input routes and set up a dual-input system. Users also can connect the same power source to these two inputs. Once the utility fails, no Line input and bypass input is available at the same time. Then, it will transfer to battery mode.

1.3.8 Reverse phase sequence operation

When the phase sequence of the line input is reversed, the UPS can still work in the line mode with "Line phase error" warning. If the bypass input connects to the line input with the same AC source, it will alarm with " Bps.phase error" warning and can't turn into bypass mode.

1.3.9 No neutral operation

When the line input disconnects from the neutral, the UPS can still work in the line mode.

1.4 Overview

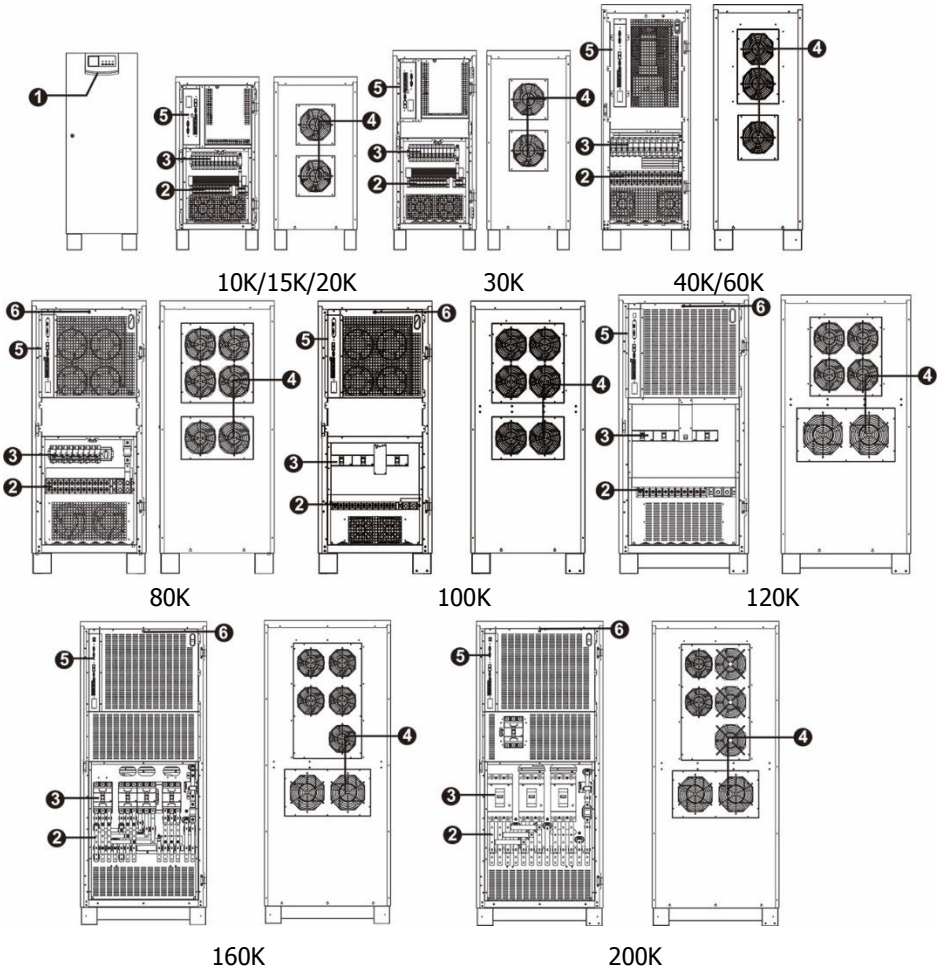

1) Interface
2) Terminals
3) Breaker and switch
4) Fans
5) Communications
6) Cold start button. This button is located same position for whole series.

2. Important Safety Warning

2.1 Conventions and used symbols

Conventions used:

WARNING! Warnings identify conditions or practices that could result in personal injury;

CAUTION! Caution identify conditions or practices that could result in damaged to the unit or other equipment connected.

	Warning, risk of electric shock
	Warning, risk of danger
	Warning, risk of electric shock, energy storage timed discharge
	Refer to the operating instructions
	Warning, danger of the possible fall down of the equipment
	Warning, Danger of fan's rotation.
	Warning, hot surface
	Protective conductor terminal
	Earth (ground) terminal
	Direct current
	Alternating current
	Both direct and alternating current
3	Three-phase alternating current
3N	Three-phase alternating current with neutral conductor
	Preservation of the environment: the users can contact with their provider or with the pertinent local authorities to be informed on how and where they can take the product to be recycled and/or disposed correctly.

2.2 Safety instructions

WARNING! Before installing and using this equipment, read all instructions and cautionary markings on the UPS and this manual. Store the manual where it can be accessed easily.

WARNING! This manual is for qualified personnel. The tasks described in this manual may be performed by qualified personnel only.

WARNING! This equipment must be installed by qualified person.

WARNING! An earth cable whose cross section should be the same as or greater than the power supply cable has to be connected to the protective earth connection.

WARNING! Make sure the UPS is isolated and protective earth correctly connected at installing and before operating the UPS.

CAUTION! This UPS should use for an IT distribution system.

CAUTION! The UPS's output neutral is same as the input neutral(Non isolate type). For the correct operation of the UPS, the input neutral cable should be connected. It may cause power loss without input neutral.

CAUTION! Please transport the UPS with packaged from factory.

WARNING! Pay attention to the slope of the ground and surface to avoid fall down when moving the equipment.

WARNING! This equipment is heavy. Do not lift too heavy without help.

CAUTION! The UPS can only working on dry condition. Shut down the UPS if any liquid flows into the UPS and dry it with absorbent cloth. Please use dry cloth when clean the UPS.

CAUTION! Please charge the battery first if using the UPS for first time or no using the UPS for a long period of time (6 months maximum).

WARNING! Never manipulate the equipment with wet hands.

CAUTION! To avoid a risk of fire and electric shock, make sure that existing wiring is in good condition and that the wire is not undersized. Do not operate the Inverter with damaged or substandard wiring.

WARNING! When the UPS shut down the power supply to the load because of EPO signal trigger, the equipment has power supply yet. To shut down the equipment's power, please turn off all the input power.

WARNING! Authorized service personnel should reduce the risk of electrical shock by disconnecting both the AC and DC power from the UPS before attempting any maintenance or cleaning or working on any circuits connected to the inverter. Turning off controls will not reduce this risk. Internal capacitors can remain charged after disconnecting all sources of power.

CAUTION! Do not open, disassemble or modify the equipment yourself. It contains no user-serviceable parts. Attempt to service this equipment yourself may cause a risk of electrical shock or fire and will void the warranty from the manufacturer.

CAUTION! Shut down the UPS If any smoke or gas exhausts from the UPS.

WARNING! Battery circuit is not isolated; it is dangerous to touch any part of the batteries.

CAUTION! When batteries are replaced, the complete battery set has to be replaced and do not reuse faulty batteries.

CAUTION! Do not expose the batteries in a fire or to high temperatures. Batteries may explode.

CAUTION! Batteries involve a serious risk for health and environment. Their disposal should be done in accordance with the existing regulations.

WARNING! Under high temperature environment, the case of this equipment could be hot enough to cause skin burns if accidentally touched. Ensure that this inverter is away from normal traffic areas.

CAUTION! Use only recommended accessories from installer. Otherwise, not-qualified tools may cause a risk of fire, electric shock, or injury to persons.

CAUTION! To reduce risk of fire hazard, do not cover or obstruct the equipment.

3. Installation

3.1 Basic requirement

- Ambient temperature: 0°C~+55°C
- Storage temperature: -15ºC ~ 60ºC
- Relative humidity: 5% ~ 95%
- Altitude: If the UPS is installed within 1000m, the UPS power will not be derated. When the height is over 1000m, the output power will be derated by following the table.

Altitude(m)	1000	1500	2000	2500	3000	3500	4000	4500	5000
Coefficient	100%	95%	91%	86%	82%	78%	74%	70%	67%

- Vertical: No vibration and the degree of deviation from vertical shouldn't be more than 5°.
- Space: It's requested to have a clearance of approx. 80 cm to the front and back of the unit and approx. 50 cm to the side.

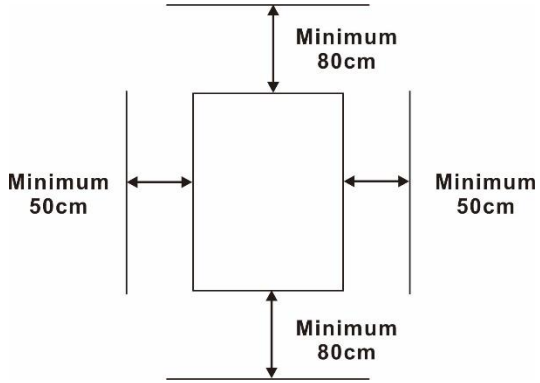

The UPS should be installed in the environment with free ventilation, less dust, optimum ambient temperature and humidity.

The recommended ambient temperature is 20°C~25°C with 50% humidity.

Caution! It's NOT allow to have flammable, explosive or corrosive gas or liquid in installation environment. It is forbidden to install in a metal conductive dust environment.

3.2 Disassembling and moving

- Please check if any damage on the carton before open.
- Then follow below steps to remove UPS from the carton and the pallet.

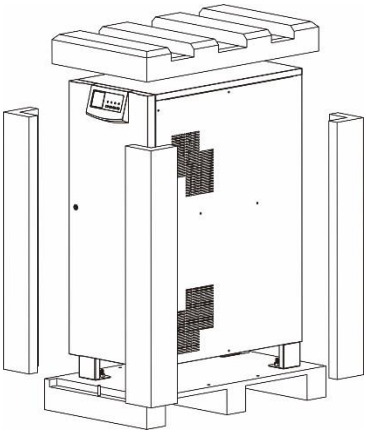

Remove the cartons and foam.

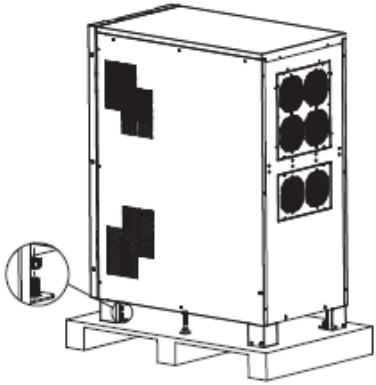

Remove the nuts showed in the figure.

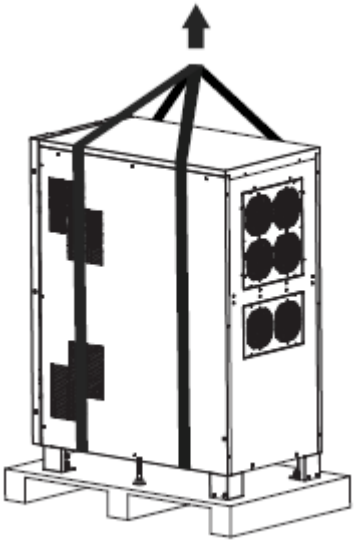

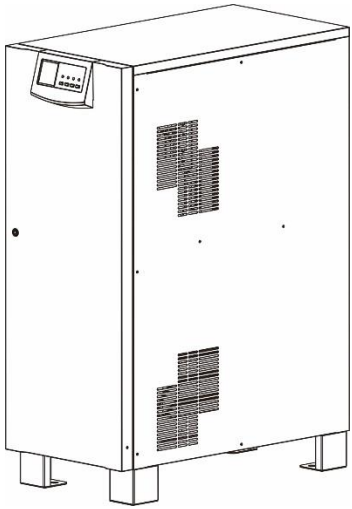

Preparing two cables. The length of two cables is about 3 meters and the bearing should be at least 1.5 tons. Fix the UPS with cables. Use the hoist to lift up the UPS and place it on the ground.

➢ After the UPS is removed from pallet, please inspect the unit and package contents. Be sure that nothing inside the package is damaged. You should have received the following items inside of package:

CD

User manual

USB cable

RS-232 cable

4. Electrical connection

4.1 Power connection

All the connectors are accessible by front panel of the UPS. Simply open the front door for wire connection. Refer below diagrams for inside panel for whole series.

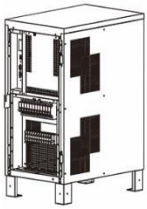

10K~20K

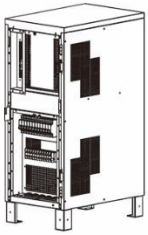

30K

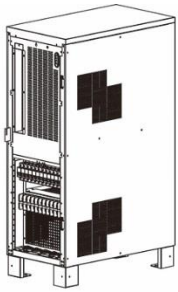

40K~60K

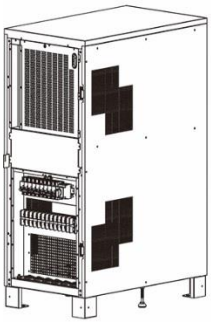

80K

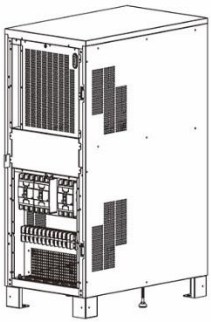

100K

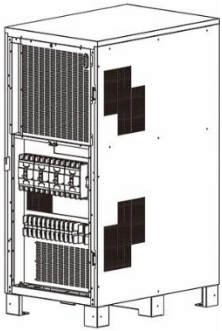

120K

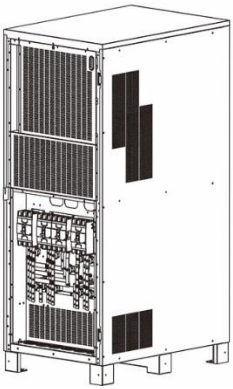

160K

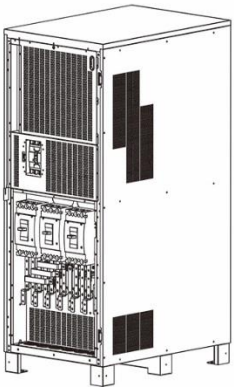

200K

The wire terminals of each model are shown as below:

➢ 10K~30K

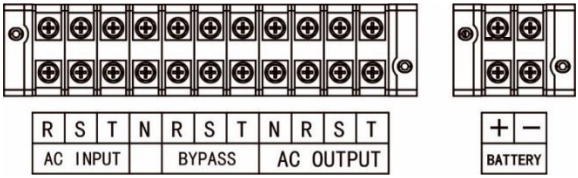

➢ 40K~60K

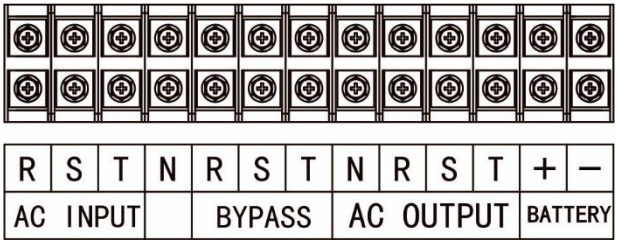

➢ 80K~120K

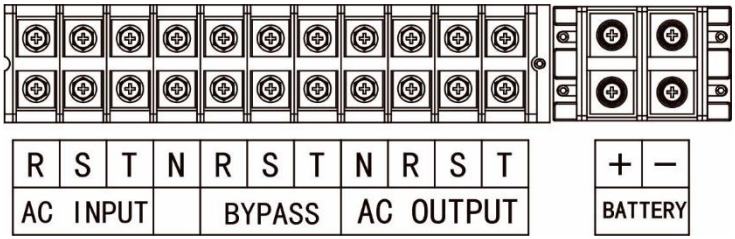

➢ 160K~200K

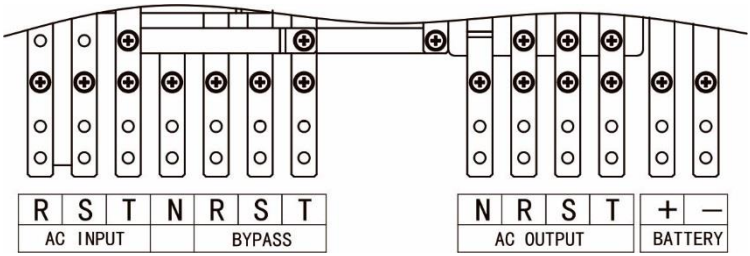

The ground terminal is shown as below:

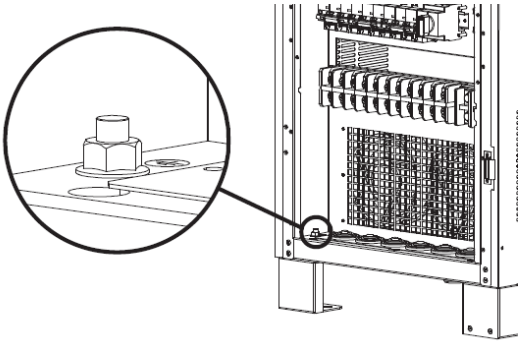

The specifications of internal breaker, fuse and switch are shown as below:

UPS Model	Input Breaker			Battery Fuse	Output	
	LINE INPUT	BYPASS	M-BYPASS		Breaker	Switch
10K	32A/3P	32A/3P	32A/3P	100A	32A/3P	N/A
15K	50A/3P	32A/3P	32A/3P	100A	32A/3P	N/A
20K	50A/3P	50A/3P	50A/3P	100A	50A/3P	N/A
30K	63A/3P	63A/3P	63A/3P	200A	63A/3P	N/A
40K	100A/3P	100A/3P	100A/3P	200A	N/A	125A/3P
60K	100A/3P	100A/3P	100A/3P	315A	N/A	125A/3P
80K	125A/3P	125A/3P	125A/3P	315A	N/A	125A/3P
100K	225A/3P	225A/3P	225A/3P	350A	225A/3P	N/A
120K	225A/3P	225A/3P	225A/3P	350A	225A/3P	N/A
160K	350A/3P	250A/3P	250A/3P	350A x 2	250A/3P	N/A
200K	350A/3P	350A/3P	250A/3P	350A x 2	350A/3P	N/A

The recommended sizes of the cables are listed as below:

UPS Model	Line Input and Ground		BYPASS/OUTPUT		BATTERY	
	Size (AWG)	Cross section (mm^2)	Size (AWG)	Cross section (mm^2)	Size (AWG)	Cross section (mm^2)
10K	≤ 10	≥ 6	≤ 10	≥ 6	≤ 8	≥ 8
15K	≤ 8	≥ 8	≤ 8	≥ 8	≤ 6	≥ 10
20K	≤ 8	≥ 8	≤ 8	≥ 8	≤ 6	≥ 10
30K	≤ 6	≥ 10	≤ 6	≥ 10	≤ 4	≥ 20
40K	≤ 4	≥ 16	≤ 4	≥ 16	≤ 2	≥ 30
60K	≤ 2	≥ 25	≤ 2	≥ 25	≤ 1/0	≥ 50
80K	≤ 1/0	≥ 40	≤ 1/0	≥ 40	≤ 3/0	≥ 80
100K	≤ 1/0	≥ 40	≤ 1/0	≥ 40	≤ 4/0	≥ 100
120K	≤ 3/0	≥ 80	≤ 3/0	≥ 80	≤ 4/0	≥ 100
160K	≤ 3/0	≥ 80	≤ 3/0	≥ 80	≤ 4/0	≥ 100
200K	≤ 4/0	≥100	≤ 4/0	≥100	≤ 4/0	≥100

The recommended sizes of the ring terminals are listed as below:

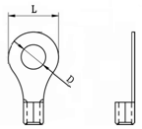

Items	10K-30K	40K-60K	80K-120K		160K~200K
	AC INPUT/ BYPASS/ OUTPUT/ BATTERY	AC INPUT/ BYPASS/ OUTPUT/ BATTERY	AC INPUT/ BYPASS/ OUTPUT	BATTERY	AC INPUT/ BYPASS/ OUTPUT/ BATTERY
D (mm)	5.3	8.4	8.4	10.5	8.4
L (mm)	12	22	22	27	22
Torque (Nm)	2	5.5	5.5	10	5.5

Recommended battery pack capacity:

Model	**10K/15K/20K**	**30K/40K**	**60K/80K**	**100K~200K**
Battery capacity	100 Ah	200 Ah	400 Ah	600 Ah

Note 1: Please set up suitable charging current and battery numbers based on specifications. Wrong configuration will shorten lifecycle of battery.

Note 2: The bypass input of the UPS is default connected to AC input wire from factory.

Therefore, if this UPS is used as dual-inputs, please cut this connection.

Note 3: If there is no neutral connection in bypass, the load with neutral connection may be out of power when UPS is in bypass mode.

After connecting all the cables, please double check the issues as below:

- Check the phase sequence of LINE INPUT, BYPASS and OUTPUT.
- Check the polarity of the battery cables.
- Make sure all the connected cables are screwed tightly.

4.2 Communication

The UPS provides a variety of communications. The details are listed as below:

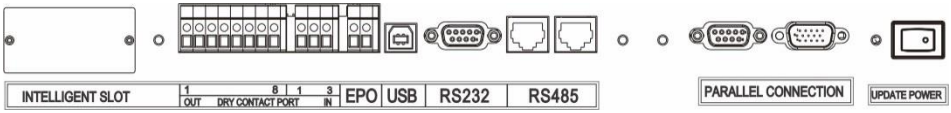

4.2.1 Intelligent slot

The intelligent slot can provide SNMP solution for remote monitor. Please request the supplier for detail information.

4.2.2 Dry contact

There are 6 output and 2 input dry contacts. The detailed functions are listed as below.

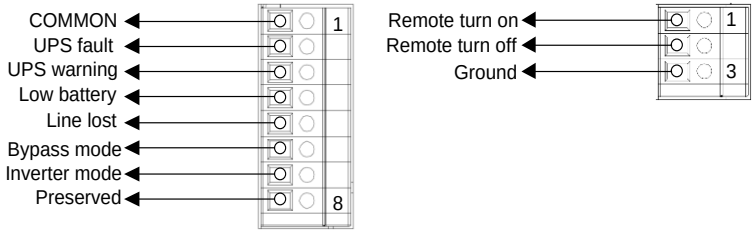

The output dry contacts only provide two passive statuses: short and open. It's necessary to connect external power source to trigger this function.

The input dry contacts provide active signals and it's not necessary to connect external power to trigger it. Users can simply short or open the ports to ground.

The detailed electrical parameters of contacts are listed as below:

Contacts	Parameters	Typical	Maximum	Unit
Output	Relay dc voltage	12	30	V
	Relay dc current	0.5	1	A

Input	Output voltage	N/A	5	V
	Output current	N/A	15	mA

Application:

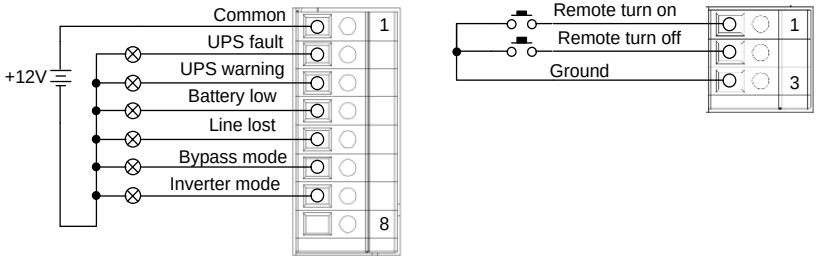

Function descriptions of output contacts:

Output contacts	Description	Status
UPS fault	UPS works normally.	Open (Default)
	UPS is fault.	Short
UPS warning	UPS works normally.	Open (Default)
	UPS is in standby, bypass, fault, line loss or low battery.	Short
Battery low	Battery voltage is normal.	Open (Default)
	Battery voltage drops to low alarm point.	Short
Line lost	Line voltage and frequency is under normal range.	Open (Default)
	Line voltage and frequency exceeds normal range.	Short
Bypass mode	UPS isn't in bypass mode.	Open (Default)
	UPS is in bypass mode.	Short
Inverter mode	UPS isn't in line or battery mode.	Open (Default)
	UPS is in line or battery mode.	Short

Function descriptions of input contacts:

Input contacts	Status	Description
Remote turn on	Open (Default)	No action
	Short	Turn on
Remote turn off	Open (Default)	No action
	Short	Turn off

4.2.3 EPO

Emergency Power Off (EPO) is the capability to shut down a system. It contains two pins of terminal strip. When it's in open circuit, it will activate shutdown of the system and cut off output. When it's in close status for UPS normal operation.

4.2.4 USB/RS232

To allow for unattended UPS shutdown/start-up and status monitoring, connect the bundled USB communication cable one end to the USB port and the other to the communication port of your PC. If using RS-232 communication, please use RS-232 cable to connect UPS and your PC. With the monitoring software installed, you can schedule UPS shutdown/start-up and monitor UPS status through PC.

4.2.5 RS485

➢ **Definition of RS485 pins :**

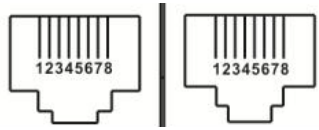

Pin#	Description
4	RS485-B
5	RS485-A
8	GND

➢ **Single unit application :**

First, please use one RS485 to RS 232 converter or RS-485 to Modbus/TCP converter as media converter between RS485 and computer. Please follow below chart for wiring connection between RS485 and media converter:

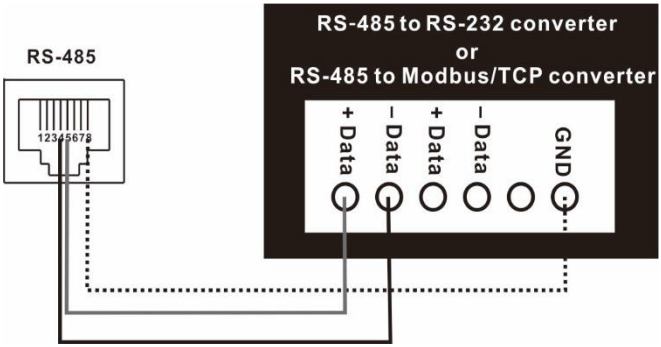

Then, follow below diagram to connect personal computer:

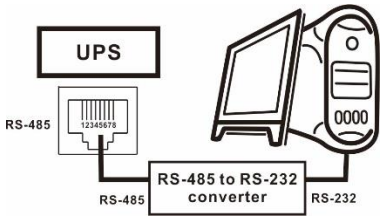

Using RS-485 to RS-232 converter

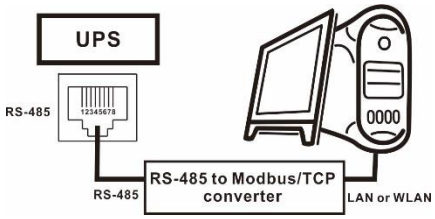

Use RS-485 to Modbus/TCP converter

The maximum communication distance can be up to 1200m.

➢ **Multiple monitoring application:**

The RS-485 can support 31 units in maximum for centralized monitoring.

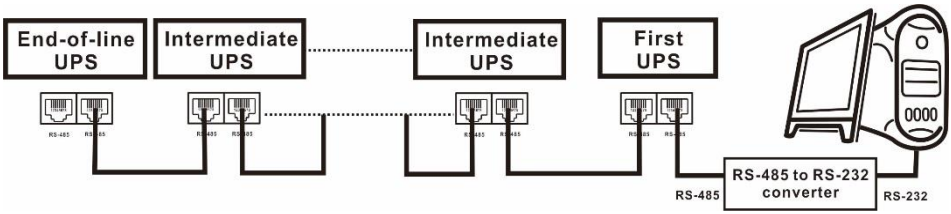

Please set the address of each unit in the LCD. Each unit should have unique address. Otherwise, it will cause conflicts in the line.

4.2.6 Software Update

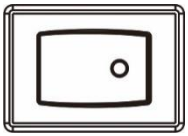

If the UPS needs to update software, press switch to "O" position. When software is updated complete, be sure to switch to " " position. When the UPS is in normal operation, please keep this switch always on " " position.

NOTE: DON'T switch this button, unless it's necessary to update software.

5. Commissioning

5.1 Start up procedure

Please follow the below steps to turn on the UPS.

➢ Before turning on the UPS, please be sure input and output wiring connection is complete. Please refer to section 2.1 for wiring connection.

Caution! This UPS can only be turned on with battery connected and utility input.

➢ Switch on line input, bypass input and battery switch. UPS will start up automatically.

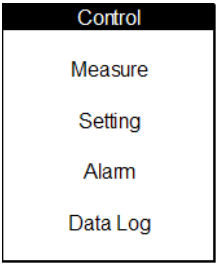

➢ Waiting for the UPS self-checking.

➢ Then, press "ENTER" to enter main menu.

➢ Press "UP" or "DOWN" key to select "Control", and then press "ENTER" key.

➢ Turn on the UPS by selecting "Yes".

➢ When UPS turns on successfully, green LED lights up. At this time, switch on output switch.

Cold start procedures:

When line input is lost, users can follow below steps to start up the UPS:

➢ Switch on battery breaker and press cold start button located on the top of front panel for a while.

➢ Wait for LCD lighting and then follow startup procedure to turn on the UPS.

Caution! When bypass mode is enabled, the UPS will transfer to bypass mode automatically if bypass input is OK. The UPS won't transfer to line mode until entering LCD main menu to turn on the UPS.

5.2 Shutdown procedure

➢ Press "ENTER" to enter main menu.

➢ Press "UP" or "DOWN" key to select "Control", and then press "ENTER" key.

➢ Turn off the UPS by selecting "Yes".

➢ If bypass mode is enabled and bypass input is OK, the UPS will transfer to bypass mode. Otherwise, the UPS will stay in standby mode. When line input is lost, the UPS will transfer to power off mode and shut down after a while.

➢ After the UPS shuts down completely, switch off line input breaker and battery switch.

➢ Switch off bypass input breaker and load switch.

5.3 Maintenance bypass operation

➢ Turn off the UPS and keep the UPS working in bypass mode.

➢ Remove the metal cover of maintain bypass breaker and then switch on maintain bypass breaker.

➢ Switch off line input breaker and battery switch.

➢ Switch off bypass input breaker. Until now, the UPS works in maintain bypass mode. At this time, the load should be working without interruption.

➢ After the maintenance is completed, switch on battery switch, AC input breaker and bypass input breaker in order. And then switch off maintain bypass breaker. Don't forget to put the cover back.

6. Interface

6.1 Control panel

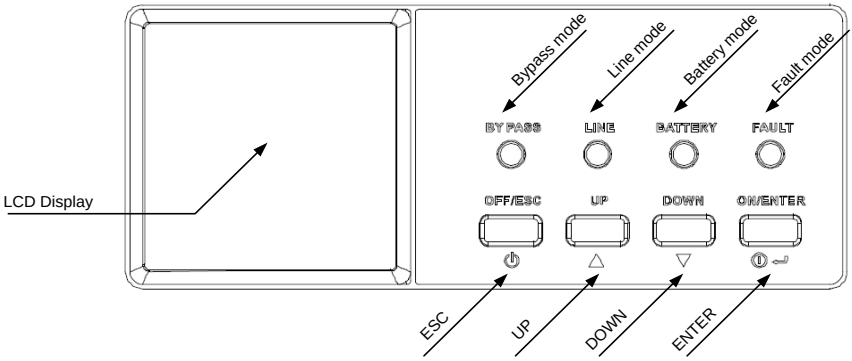

6.1.1 LED indicators

Mode / LED	Bypass	Line	Battery	Fault
UPS start	O	O	O	O
Standby	●	●	●	●
Bypass mode	O	●	●	●
Line mode	●	O	●	●
Battery mode	●	●	O	●
Fault	●	●	●	O
Warning	●	●	●	⦿
Battery test	●	O	O	●
ECO mode	O	O	●	●

Note: ● means LED is faded; O means LED is lit; ⦿ means LED is flashing.

6.1.2 Buzzer

UPS state	Buzzer status	Muted
Bypass/Standby	Beeping once every 2 minutes	Yes
Battery / Battery-test mode (normal battery voltage)	Beeping once every 4 seconds	Yes
Battery / Battery-test mode (low battery voltage)	Beeping once every second	Yes
Fault	Beeping continuously	Yes
Warnings (except overload)	Beeping once every second	No
Overload	Beeping twice every second	No

6.1.3 Button definition

Button	Function Description
ON/ENTER	➢ Turn on the UPS: Press and hold the button more than 0.5s to turn on the UPS. ➢ Enter setting menu: Press this button to enter setting menu. ➢ Enter Key: Press this button to confirm the selection in setting menu.
OFF/ESC	➢ Turn off the UPS: Press and hold the button more than 0.5s to turn off the UPS. ➢ Esc key: Press this button to exit from setting menu or cancel the setting.
UP	➢ Press this button to select the upper item in the menu or previous page in the screen or increase the number in the setting.
DOWN	➢ Press this button to select the lower item in the menu or next page in the screen or decrease the number in the setting.

6.2 LCD information

6.2.1 Basic

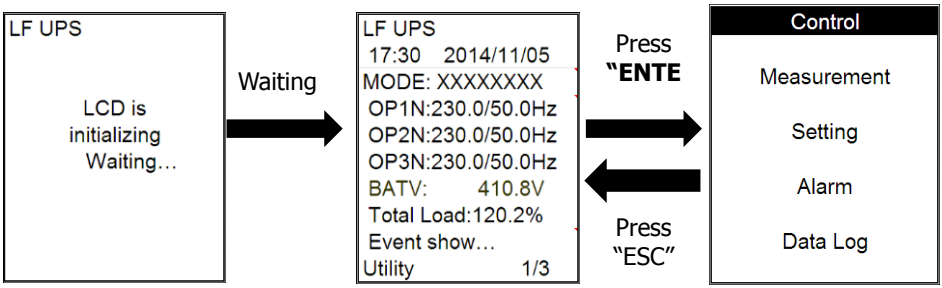

Initializing Main Page Main menu

After the UPS is powered on, LCD will initialize first and then display main page. After pressing "ENTER" button, it will enter main menu.

➢ Initialization

When first starting up the UPS, the LCD will show initialization. Please kindly wait.

➢ Main page

This page is used to display basic information. Users can get the UPS information by pressing "UP" and "DOWN" buttons.

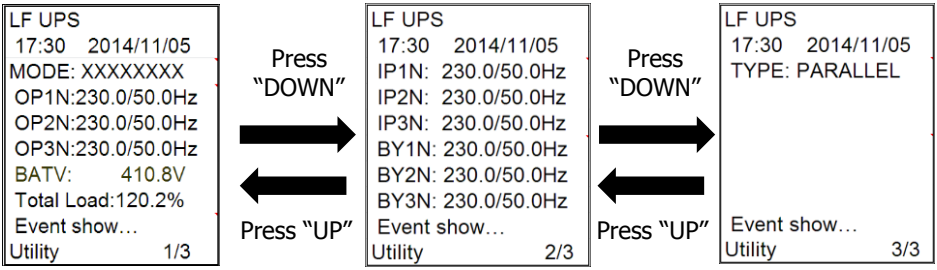

Parameters	Description
MODE	Working mode of the UPS
OP1N OP2N OP3N	Output voltage and frequency in 3-phase
BATV	Battery voltage
Total Load	The total connected loads in percentage
IP1N IP2N IP3N	Line input voltage and frequency in 3-phase
BY1N BY2N BY3N	Bypass voltage and frequency in 3-phase
TYPE	Working type: "Single" or "Parallel"
Event show…	Shows current events such as turn on, warning, fault etc. If there is no event, it will be blank.
Utility	Shows the current AC input source. This value can be set in basic setting. Please refer to 6.3.3 for detailed description.

➢ Main menu

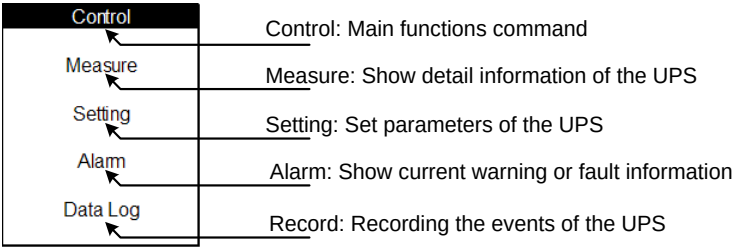

1) Press "UP" or "DOWN" button to select sub-menus. When selected, the text will be highlighted.
2) Press "ON/ENTER" button to confirm the selection.
3) Press "OFF/ESC" button to return to main page.

6.3 Sub-menus

6.3.1 Control sub-menu

There are 4 options listed in Control sub-menu: Turn on, Batt Test (Battery test), Mute, S.D &R (Shutdown and restore). It is to real-time control the UPS. Press "UP" or "DOWN" button to switch selection. Press "ON/ENTER" button to confirm the selection. Then, press "OFF/ESC" button to return to main menu (refer to 6-2-1).

1) Turn On: "Turn On" will be displayed if UPS is not turned on. Otherwise, "Turn off" will be displayed.
2) Batt Tes: "Batt test" will be displayed if UPS is not in battery test mode. Otherwise, "Cancel Batt Test" will be displayed.
3) Mute: "Mute" will be displayed if UPS is not in mute status. Otherwise, "Cancel Mute" will be displayed.
4) S.D&R: "S.D & R" will be displayed if UPS is not in the shutdown and restore process. Otherwise, "Cancel S.D & R" will be displayed.

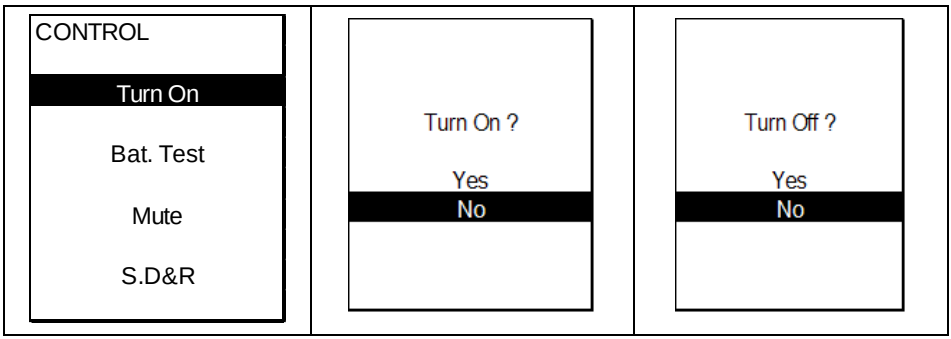

CONTROL Sub-Menu	Battery Test? Yes No	Cancel Bat. Test? Yes No
	Mute? Yes No	Cancel Mute? Yes No
	Shutdown&Restore? Yes No	Cancel S.D.&R.? Yes No

6.3.2 Measurement sub-menu

There are 10 measurement pages. Press "UP" or "DOWN" button to browse information. Press "OFF/ESC" button to return to main menu (refer to 6-2-1).

LCD Screen	Parameters	Description
INPUT Voltage R: 221.1V S: 219.5V T: 219.5V RS: 383.2V ST: 383.2V TR: 383.2V Frequency: 50.0Hz 1/10	Line input voltage Voltage R Voltage S Voltage T Voltage RS Voltage ST Voltage TR Frequency	 Line input R to N (V) Line input S to N (V) Line input T to N (V) Line input R to S (V) Line input S to T (V) Line input T to R (V) Line input frequency (Hz)
Output Voltage R: 221.1V S: 219.5V T: 219.5V RS: 383.2V ST: 383.2V TR: 383.2V Frequency: 50.0Hz 2/10	Output voltage Voltage R Voltage S Voltage T Voltage RS Voltage ST Voltage TR Frequency	 Load output R to N (V) Load output S to N (V) Load output T to N (V) Load output R to S (V) Load output S to T (V) Load output T to R (V) Line output frequency (Hz)
Output Current R: 100.1A S: 100.1A T: 100.1A Power Factor R : 0.80 S : 0.80 T : 0.80 3/10	Output current & frequency Current R Current S Current T Power Factor R S T	 Load output phase R current (A) Load output phase S current (A) Load output phase T current (A) Load output power factor Phase R Phase S Phase T
Apparent Power R: 130.0KVA S: 130.0KVA T: 130.0KVA Active Power R: 120.0KW S: 120.0KW T: 120.0KW 4/10	Output apparent Power R (KVA) S (KVA) T (KVA) Active Power R (KW) S (KW) T (KW)	Load output apparent power per phase Phase R (KVA) Phase S (KVA) Phase T (KVA) Load output active power per phase Phase R (KW) Phase S (KW) Phase T (KW)

LCD Screen	Parameters	Description
Total Power 300.0KVA 240.0KW 5/10	Total Power KVA KW	Load total output power Apparent power (KVA) Active power (KVA)
Load Percent R: 10.0% S: 10.0% T: 10.0% Total 30.0% 6/10	Connected Load in percentage R (%) S (%) T (%) Total Load (%)	Load power percentage per phase Phase R (%) Phase S (%) Phase T (%) Total connected power in percentage
Bypass Voltage R: 221.1V S: 219.5V T: 219.5V RS: 383.2V ST: 383.2V TR: 383.2V Frequency: 50.0Hz 7/10	Bypass voltage Voltage R Voltage S Voltage T Voltage RS Voltage ST Voltage TR Frequency	Bypass input information Bypass input R to N (V) Bypass input S to N (V) Bypass input T to N (V) Bypass input R to S (V) Bypass input S to T (V) Bypass input T to R (V) Bypass input frequency (V)
Inverter Voltage R: 221.1V S: 219.5V T: 219.5V RS: 383.2V ST: 383.2V TR: 383.2V Frequency: 50.0Hz 8/10	Inverter voltage Voltage R Voltage S Voltage T Voltage RS Voltage ST Voltage TR Frequency	Inverter output information Inverter output R to N (V) Inverter output S to N (V) Inverter output T to N (V) Inverter output R to S (V) Inverter output S to T (V) Inverter output T to R (V) Inverter output frequency (Hz)

LCD Screen	Parameters	Description
Battery: 432.0V Bus: 360.5V Charging: 5.2A Discharging: 5.2A 9/10	Battery and charger information Battery Voltage DC Bus Voltage Charging current Discharging current	 Battery Voltage (V) DC Bus Voltage (V) Charging current (A) Discharging current (A)
Temperature Control: 40 Battery: 40 REC: 60 INV0: 60 INV1: 60 SCR: 60 10/10	Temperature information Control Battery REC INV0 INV1 SCR	 Control board temperature (°C) Battery SCR temperature (°C) Rectifier SCR temperature (°C) INV0 IGBT temperature (°C) INV1 IGBT temperature (°C) Output SCR temperature (°C)

6.3.3 Setting sub-menu

This sub-menu is used to set the parameters of UPS and show the current setting information. There are 3 options: Basic, Information and Advanced. Press "UP" or "DOWN" button to switch selection. Press "ON/ENTER" button to confirm the selection. Then, press "OFF/ESC" button to return to main menu (refer to 6-2-1).

NOTE: Not all settings could be available in every operation mode. If the setting is not available in present mode, the LCD will keep its original setting parameter showed instead of changing the parameters.

LCD Screen	Parameters	Description
SETTING Basic Information Advanced	Basic	It's to set up basic information of the UPS. It's not relative to any function parameter.
	Information	The information of UPS default information and current setting of function parameters.
	Advanced	It's required to enter password to access the "ADVANCED" setting.

Please follow the steps as below to operate this sub-menu.

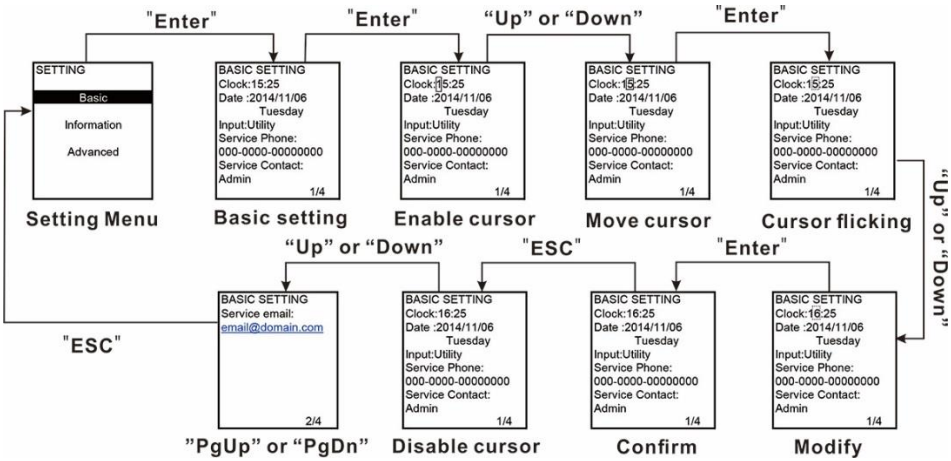

➢ Basic Setting

LCD Screen	Description
BASIC SETTING Clock:15:25 Date :2014/11/06 Language:English Input: Utility Service Phone: 000-0000-00000000 Service Contact: Admin 1/5	**1. Clock:** Set the time. The time format is HH:MM:SS. **2. Date:** Set the date. The date format is MM/DD/YYYY. **3. Language:** Set the LCD language. There are two options: English and Chinese. English is default setting. **4. Input:** Select the input source. There are two options: utility and generator. Utility is default setting. This setting value will show on the main page. When "generator" is selected, the acceptable input frequency will be fixed at the range of 40~60Hz and voltage will be fixed at the range of 165~280V. **5. Service Phone:** Set the service phone number. Only 0~9, + and – are accepted. The maximum length is 14 characters. **6. Service Contact:** Set the contact person name and the maximum length is 17 characters.
BASIC SETTING Service email: email@domain.com 2/5	**1. Service Email:** Set the service email and the maximum length is 34 characters.

LCD Screen	Description
BASIC SETTING RS485 Baud Rate: 19200 RS485 Protocol: MODBUS Modbus Address:1 Exit Fault Mode: No 3/5	**1. RS485 Baud Rate:** Select RS485 baud rate. The default setting of baud rate is 19200. **2. RS485 Protocol:** Select the RS485 protocol type. The default setting of protocol type is "Modbus". **3. Modbus Address:** Set the Modbus address. The range is from 1 to 247. **4. Exit Fault Mode:** **YES:** When fault occurs, UPS could exit fault mode and work in other mode such as Line mode or battery mode and so on. **NO:** When fault occurs, UPS will remain in fault mode.
BASIC SETTING Auto Bat.T: Dis Type: Monthly Day of month: 01 Calendar Date: Sun Hour&Min: 00:00 4/5 BASIC SETTING Permanently Mute All: Dis Mode: Dis Warn: Dis Fault: Dis 5/5	**1. Automatic battery test:** You can choose enable/disable the auto battery test function. If "Enable" is selected, please also set up other parameters. ● Type: Select automatic battery test type. There are three options: Monthly, weekly and daily. And all detailed testing frequency such as time and date can be set up next. ● Day of month: Please pick up one day if choosing "monthly". ● Calendar date: Please pick up one if choosing "weekly". ● Hour&Min: Please set up the time. **2. Permanently mute:** There are four events available to mute. You may choose "Enable" or "Disable" alarm when related events occur. En: Enable. When selected, alarm will be mute when related events occur. Dis: Disable. When selected, UPS will alarm when related events occur. ● Mode: Enable/Disable this function. ● Warning: When "enable" is selected, only warning events will be mute. ● All: When "enable" is selected, all the faults and warnings events will be mute. ➢ Fault: When "enable" is selected, only fault events will be mute.

➢ **Information**

LCD Screen	Description
INFORMATION Version: MCU: 1610.13.A DSP: 1609.07.A H W: 1610.13.A Serial Number: 0123456789ABCDEF 1/7	1. **MCU Ver.:** MCU version. 2. **DSP Ver.:** DSP version. 3. **HW Ver.:** Hardware version. 4. **Serial Number:** The serial number of UPS.
INFORMATION OP Rated Vol: 220V OP Freq: 50.0 CVCF Status: Dis Line Volt Range: 176~265V Line Freq.Range: 46.0Hz~54.0Hz 2/7	1. **OP rated Volt:** Output rated voltage. 2. **OP Freq.(Hz):** Output frequency. 3. **CVCF status:** Enable/Disable CVCF mode (Constant Voltage and Constant Frequency). 4. **Line Voltage Range:** The voltage range of line input. 5. **Line Freq. Range:** The frequency range of line input.
INFORMATION Byp.forbid: No Byp.at off: En Byp. Volt Range: 176~265V Byp. Freq.Range: 46.0~54.0Hz 3/7	1. **Byp. forbid:** Enable/disable bypass function. 2. **Byp. At UPS off:** Enable/disable auto bypass function when UPS is off. 3. **Byp. Voltage Range:** The acceptable voltage range for bypass input. 4. **Byp. Freq. Range:** The acceptable frequency range for bypass input.

LCD Screen	Description
INFORMATION ECO Status: Dis ECO Volt Range: 205~235V ECO Freq.Range : 48.0~52.0Hz Auto-Restart: En 4/7	1. **ECO Status:** Enable/disable ECO function. 2. **ECO Voltage Range:** The acceptable voltage range for ECO mode. 3. **ECO Freq. Range:** The acceptable frequency range for ECO mode. 4. **Auto-Restart:** Enable/disable auto-restart function.
INFORMATION Bat.Mode Work Time: 9999 Min Bat.Warn Volt Low: 11.2V High: 14.5V Bat.Protect Volt Low: 10.5V High: 15.0V 5/7	1. **Bat. Mode Work Time:** The maximum discharge time in battery mode. 2. **Bat Warn Volt:** **Low:** Low battery warning voltage. **High:** High battery cut-off voltage. 3. **Battery protect voltage:** If battery voltage is beyond this range, UPS will automatically shut down. Please go to Advanced→ USER → Bat.Protect Volt for setting. **Low:** Battery low loss voltage **High:** Battery high loss voltage
INFORMATION Sys. S.D Time 1 Sec Sys. Restore Time 1 Min 6/7	1. **Sys. Shutdown Time:** The system shutdown time. 2. **Sys. Restore Time:** The system restore time.

LCD Screen	Description
INFORMATION Service Contact: Admin Service Phone: 000-0000-00000000 Service email: email@domain.com 7/7	1. **Service Contact:** The contact name is set in "Basic Setting". 2. **Service Phone:** The listed numbers are set in "Basic Setting". 3. **Service email:** The contact email is set in "Basic Setting".

➢ **Advanced**

LCD Screen	Description
USER Password: 0000	It's required to enter password (4 digits) to access the "ADVANCED". The default password is "**0000**". If entered password is right, the page will jump to setting screen. If the password is wrong, it will ask to enter again.
USER OP Rated Vol: 220V OP Freq: 50.0 CVCF Status: Dis Line Volt Range: 176~265V Line Freq.Range: 46.0Hz~54.0Hz 1/5	1. **OP rated voltage:** Select the output rated voltage. There are three options, 220Vac, 230Vac and 240Vac. 220Vac is default setting. 2. **OP Frequency:** Select the output frequency **50Hz:** The output frequency is setting for 50Hz. **60Hz:** The output frequency is setting for 60Hz. 50Hz is default setting. 3. **CVCF status** (constant voltage and constant frequency function) **En :** CVCF function is enabled. The output frequency will be fixed at 50Hz or 60Hz according to setting of "OP Freq.". The input frequency could be from 40Hz to 70Hz. **Dis:** CVCF function is disabled. The output frequency will synchronize with the bypass frequency within 45~55 Hz for 50Hz system or within 55~65 Hz for 60Hz system. Disable is the default setting. 4. **Line Voltage range:** Set the acceptable line input voltage range according to setting value in output rated voltage. OP rated voltage(V) | Low voltage point (V) | High voltage point (V)

220	165~205 (default 176)	235~280 (default 265)
230	165~215 (default 176)	245~280 (default 265)
240	165~225 (default 176)	255~280 (default 265)

5. Line Frequency range: Set the acceptable line input frequency range.

Low frequency point for line voltage: The setting range is 45Hz ~ 49Hz for 50Hz system and 55Hz ~ 59Hz for 60Hz system. 46Hz is default setting for 50Hz system and 56Hz is default setting for 60Hz system.

High frequency point for line voltage: The setting range is 51Hz ~ 56Hz for 50Hz system and 61Hz ~ 66Hz for 60Hz system. 54Hz is default setting for 50Hz system and 64Hz is default setting for 60Hz system.

USER
Byp.forbid: No
Byp.at off: En
Byp. Volt Range:
176~265V
Byp. Freq.Range:
46.0~54.0Hz

2/5

1. Bypass forbidden:

No: Bypass allowed. When selected, UPS will run at Bypass mode depending on "Byp.at off" setting. It is the default setting.

Yes: Bypass not allowed. When selected, it's not allowed for running in Bypass mode under any situations.

2. Bypass at off: Select the bypass status when manually turning off the UPS. This setting is only available when "**Bypass forbid.**" is set to "No".

En: Bypass enabled. When selected, bypass mode is activated.

DIS: Bypass disabled. When selected, no output through bypass when manually turning off the UPS.

3. Bypass voltage range: Set the bypass voltage range.

L: Low voltage point for bypass. The setting range is 176V ~ 205V. 176V is default setting.

H: High voltage point for bypass. The setting range is 235V ~ 264V. 264V is default setting.

4. Bypass frequency range: Set the bypass frequency range.

L: Low frequency point for bypass. The setting range is 45Hz ~ 49Hz for 50Hz system and 55Hz ~ 59Hz for 60Hz system. 46Hz is default setting for 50Hz system and 56Hz is default setting for 60Hz system.

H: High frequency point for bypass. The setting range is 51Hz ~ 56Hz for 50Hz system and 61Hz ~ 66Hz for 60Hz system. 54Hz is default setting for 50Hz system and 64Hz is default setting for 60Hz system.

LCD Screen	Description
USER ECO Status: Dis ECO Volt Range: 205~235V ECO Freq.Range : 48.0~52.0Hz Auto-Restart: En 3/5	**1. ECO Status:** Enable/Disable ECO mode. Default setting is "Disable". **2. ECO Voltage Range:** Set the ECO voltage range. **Low voltage point for ECO mode:** The setting range is 176V ~ 210V. The default setting is 205V. **High voltage point for ECO mode:** The setting range is 230V ~ 264V. The default setting is 235V. **3. ECO Freq. Range:** Set the ECO frequency range. **Low frequency point for ECO mode:** The setting range is s 45Hz ~ 49Hz for 50Hz system and 55Hz ~ 59Hz for 60Hz system. The default setting is 48Hz for 50Hz system and 58Hz for 60Hz system. **High frequency point for ECO mode:** The setting range is 51Hz ~ 56Hz for 50Hz system and 61Hz ~ 66Hz for 60Hz system. The default setting is 58Hz for 50Hz system and 62Hz for 60Hz system. **4. Auto-Restart:** Enable/Disable auto-restart function. **En:** Enable the auto-restart function. If selected, once UPS shutdown occurs due to running out battery and then utility restores, the UPS will return to line mode. The default setting is "Enable". **Dis:** Disable the auto-restart function. If selected, once UPS shutdown occurs due to running out battery and then utility restores, the UPS will not restart.
INFORMATION Bat.Mode Work Time: 999 Min Bat.Warn Volt Low: 11.2V High: 14.5V Bat.Protect Volt Low: 10.5V High: 15.0V 5/7	**1. Bat. Mode Work Time(Min.):** Set the maximum discharge time in battery mode. The setting range is from 1 to 999. The unit is minute. **2. Bat Warn Volt:** **Low:** Low battery warning voltage. The setting range is 10.6V ~ 12.5V. The default setting value is 11.2V. **High:** High battery warning voltage. The setting range is 13.0V ~ 15.0V. **3. Battery Protect Voltage:** When the battery voltage is beyond the Low and High point in battery mode, the UPS will shut down. **Low:** Low loss voltage. The setting range is from 9.0V to 12.0V. The default setting value is 10.5V. **High:** High loss voltage. The setting range is 13V ~ 15V. The default setting value is 15V.

<table>
<tr>
<td>

```
USER
Sys. S.D Time
    1          Sec
Sys. Restore Time
    1          Min

New Password:  No
Battery:       ON
Active Bat:    ON
               5/5
```

Fig. (1)

```
PARAMETER

Old Password:
        0000
New Password:
        0000
```

Fig. (2)

</td>
<td>

These two parameters are related to the "S.D & R" on the "CONTROL" sub-menu. If executing "S.D & R" action, the UPS will shut down and restore according to system shutdown time and system restore time setting here. For example, if the system shutdown time is 1 second, the system restore time is 2min, it means the UPS will shut down in 1 minute and wait for 2 minutes, then restart again.

1. **System shutdown Time:** Set the system shutdown time. The setting range is 1 sec. ~ 9999 sec. The default setting value is 1 second.
2. **System Restore Time:** Set the system restart time after shutdown. The setting range is 1 minute to 9999 minutes. The default setting value is 1 minute.
3. **New Password:** Modify password function.

   No: No change for password.

   YES: Modify the password. If selected, the LCD will display the screen as shown in Fig. (2).
4. **Battery:** Battery charge or discharge control setting.

   ON: When selected, battery could charge or discharge

   OFF: When selected, battery is not allowed charge or discharge
5. **Active Battery:**

   ON: When selected, battery is allowed to charge even though the warning of "battery open" occurs.

   OFF: When selected, battery is not allowed to charge when the warning of "battery open" occurs.

</td>
</tr>
</table>

- **Service**

LCD Screen	Description
SERVICE Password: XXXX	It's required to enter password (4 digits) to access the "SERVICE". If entered password is right, the page will jump to service setting screen. If the password is wrong, it will ask to enter again. **NOTE:** please call for service to offer service password.

SERVICE Parameters Calibration Initial	**1. Parameters:** Setting key parameters of the UPS. **2. Calibration:** Calibrating the voltage or current of the UPS. **3. Initial:** Restore factory settings

Parameters

LCD Screen	Description
PARAMETER Sys.Installed 2014/11/06 Sys.Last Maintain 2014/11/06 Battery Installed 2014/11/06 Bat. last Maintain 2014/11/06 1/6	**1. Sys.Installed Date:** Setting the installation date. **2. Sys.Last Maintain Date:** Setting the last maintenance date. **3. Battery installed Date:** Setting the battery installation date. **4. Bat.last maintain Date:** Setting the battery last maintenance time.
PARAMETER Battery Life(Year): 3 Bat Cell Num: 32 Bat Cell Volt 13.5V Bat.Cap.(Ah): 100 Max Charg.Current 10.0A 2/6	**1. Battery Life:** Setting the battery Lifecycle in years. **2. Bat Cell Num**: Setting total battery numbers in series. There are four options: 29, 30, 31, 32. The default setting is 32. **3. Bat Cell Volt**: Setting float voltage. The setting range is from 9.0V to 15.0V.The default setting value is 13.5V. **4. Bat.Cap(Ah):** Setting battery capacity. The setting range is from 1 to 250. Default setting is 100Ah. **5. Max Charg.Current**: Setting the Max. charge current. Max Current=0.2 x Bat.Cap(Ah). The max. value is 40A even though you want to set up higher than 40A. The default setting is 10 A.

PARAMETER Battery Test Stop By Time: Dis Time(Min): 1 Stop By Vol: En Stop Voltage: 11.5V 3/6	**Battery Test:** Set up battery test method. **1.** Stop By Time: **En:** Stop battery test function by time. If selected, once battery test time reaches the setting time (Min), the UPS will stop battery test. **Dis:** Disable battery test timer. Default setting is disable. **2.** Stop By Voltage: **En:** Stop battery test function by battery voltage. If selected, once battery voltage reaches the setting value (V), the UPS will stop battery test. (Default setting) **Dis:** Disable battery test by battery voltage.
PARAMETER Model: A80 Type: Single Name: LF UPS Serial Number: 0123456789ABCDEF Manufacturer: ABCDEFGHIJKLMNO 4/6	**1. Model:** It represents internal control version. **2. Type:** Setting the UPS type. There are two options, parallel and single. **3. Name:** Setting the UPS display name on the LCD screen. **4. Serial Number:** Setting the serial number of the UPS. **5. Manufacturer:** Setting the name of manufacturer.
PARAMETER New Password: No UserPW Reset: No Work Limit: No Days: 0 In&Out: 3-3 Control P: Para1 LV Unit: No Repetitive C: On 5/6	**1. New password:** **Yes**: If selected, it will pop up a screen to set up new service password. **No**: No change for the current password. **2. User PW Reset:** Resetting user new password. If "Yes" is selected, the user password will become "0000". **3. Work limit and days:** Setting probation period. **Yes:** If selected, please set up the probation days. When deadline arrives, it will lock the UPS to work on bypass mode and it will show "Please pay first" in the LCD screen. **No:** If selected, no limitation. **4. In&Out:** it presents input and output information of the UPS. 3-3: 3-phase in and 3-phase out. 3-1: 3-phase in and single phase out. **5. Control P:** it presents INV output parameter. **6. LV Unit:** it presents UPS output voltage type. **7. Repetitive C:** it presents INV control type.

LCD Screen	Description
PARAMETER Factory SN: 0123456789ABCDEF Output PF: 0.8 No Bat On Load: En Maintenance To Remind: Never 5/6	**1. Factory SN:** it presents factory series number. **2. Output PF:** Setting output power factor. There are two options: 0.8 and 0.9. If power failure occurs, the setting will become default. **3. No Bat On Load:** **En:** If selected, the UPS could operate on AC mode without battery, but it will show "battery is not connected" as reminder. **Note:** In this mode, when the AC input is unstable, the UPS will enter to bypass mode. If bypass voltage is unstable or no input on bypass, there is risk of power failure for the loads. **Dis:** If selected, the UPS couldn't be turned on without battery. **4. Maintenance to Remind:** Setting the maintenance time. There are four options, Never, 3 months, 6 months and 1 year. "Never" is the default setting. When setting time is up, it will show a warning of "Need to maintain" in the LCD screen. If the time is not up and you re-set up the timer, it will calculate the time from the beginning.
PARAMETER Show Real Power: No 6/6	**1. Show Real Power** **Yes:** It's allowed to show real power information on "Information" menu. **No:** It's not allowed to show real power information on "Information" menu.

Calibration

LCD Screen	Description
CALIBRATION Input Voltage: R =220.2V ->100.6% S =220.2V ->100.6% T =220.2V ->100.6% Bypass Voltage: R =220.2V ->100.6% S =220.2V ->100.6% T =220.2V ->100.6% 1/6	1. **Input voltage:** Calibrate input R/S/T voltage setting by percentage. 2. **Bypass voltage:** Calibrate bypass R/S/T voltage setting by percentage.
CALIBRATION Output Voltage: R =220.2V ->100.6% S =220.2V ->100.6% T =220.2V ->100.6% Output Current: R = 25.2A ->100.6% S = 25.2A ->100.6% T = 25.2A ->100.6% 2/6	1. **Output voltage:** Calibrate output voltage setting by percentage. 2. **Output Current:** Calibrate output current setting by percentage.
CALIBRATION INV Voltage: R =220.2V ->100.6% S =220.2V ->100.6% T =220.2V ->100.6% INV Current: R = 25.2A ->100.6% S = 25.2A ->100.6% T = 25.2A ->100.6% 3/6	1. **INV voltage:** Calibrate INV voltage setting by percentage 2. **Bypass Current:** Calibrate bypass current setting by percentage.
CALIBRATION DC Bus Voltage: 423.1V ->100.1% Battery Voltage: 303.0V-> 100.0% 4/6	1. **DC Bus Voltage:** Calibrate DC Bus voltage setting by percentage. 2. **Battery Voltage:** Calibrate battery voltage setting by percentage.

CALIBRATION Inv. Vol. Offset: R= 0.0V->100 S= 0.0V->100 T= 0.0V->100 Out. Vol. Offset: R= 0.0V->100 S= 0.0V->100 T= 0.0V->100 5/6	1. **Inv. Vol. Offset:** Calibrate inverter voltage offset setting by percentage. 2. **Out. Vol. Offset:** Calibrate output voltage offset setting by percentage.
CALIBRATION Charging Current: 5.3A ->100.1% Charg.C .Offset: 5.5A -> 1.2A 6/6	**Charging Current:** Calibrate charging current setting by percentage. **Charge. C. Offset:** Calibrate charging current offset setting by Ampere.

Initialize

INITIALIZE Data Log Parameter Calibration Factor EEPROM Initialize menu	INITIALIZE Do you want to initialize the Data Log Factor? YES NO	INITIALIZE Do you want to initialize the Data Log Factor? YES NO
	INITIALIZE Do you want to initialize the Parameters? YES NO	INITIALIZE Do you want to initialize the Parameters? YES NO

	INITIALIZE Do you want to initialize the Calibration? YES NO	INITIALIZE Do you want to initialize the Calibration? YES NO
	INITIALIZE Do you want to initialize the EEPROM? YES NO	INITIALIZE Do you want to initialize the EEPROM? YES NO

6.3.4 Alarm sub-menu

LCD Screen	Description
ALARM W01 BATT. Open F02 BUS High	**ALARM** page is used to display the current warning and fault information of the UPS. If no alarm occurs, it's blank. **W** means warning. Warning code and short descriptions of warning event will display. Please refer section 8.1 for the warning code. **F** means fault. Fault code and short descriptions of fault event will be displayed. Please refer section 8.2 for the fault code. Press "ESC" button to go back to main menu.

6.3.5 Data log sub-menu

LCD Screen	Description
DATA LOG Code:F65 **Detail** 002) Over temperature Time: 14:06:45 2016/12/07	1) Data log is used for recording the warning and fault information of the UPS. The record contains code, basic information and time. 2) Press "ON" and "DOWN" to page up or down if the log has more than one page. 3) Press "ESC" button to go back main menu. "ENTER" button is useless in this page. 4) W + num.: Warning + Warning code; F + num.: Fault + Fault code, please refer to part 8 to have the detail information about warning and fault. 5) Detail: It shows input and output information while fault occurs. Simply click "Detail" button, it will pop up the details. Below are the pop up screens.

FAULT DETAIL
Line Voltage:
228V 229V 228V
Bypass Voltage:
0V 0V 0V
Inverter Voltage:
0V 0V 0V
Output Voltage:
0V 0V 0V
1/4

FAULT DETAIL
Battery: 10V
Bus Voltage: 0V
Inverter Current:
6V 4V 7V
Line Freq: 50Hz
Bypass Freq: 0Hz
Load Percent:
0% 0% 0%
2/4

FAULT DETAIL
Temperature
CTL : 22 BAT :23
REC : 23 SCR : 22
INV1: 22 INV2: 22
Bits Of Status
Line: 0040
Bypass: 011F
Work: 0600
3/4

FAULT DETAIL
Mode Before:
Standby
4/4

7. Maintenance

Caution! Inside maintenance is only available for the engineer with qualified electrical knowledge.

There is still possible high voltage inside of the unit even disconnect all connections.

7.1 System maintenance

- Check if indicators and LCD function well and the buttons are functional.
- Make sure there is no abnormal noise inside of the unit.
- Make sure nothing blocks the ventilation of the unit.
- Please use dry towel to clean the surface of the unit when it is not working.
- Please check the outlook condition of all wires and connection situation periodically after disconnecting all power. The checking interval should be less than 2 years.

7.2 Battery maintenance

In order to prolong the lifecycle of the battery, please do the maintenance periodically.

- The lifecycle of the battery is based on ambient temperature and recharge cycles. Please make the battery working under the ambient temperature between 15°C ~25°C.
- Check the voltage of the battery pack weekly. Check the voltage of each battery monthly.
- Keep the environment of battery clean and tidy.
- Check the terminals of the batteries termly, make sure they are tightened.
- Please charge the battery once a month if the battery hasn't been used for a long time.
- If the discharging time is much less than normal situation, please check if it's time to replace them.

8. Trouble shooting

8.1 Warning code

Code	Event	How to do
01	Battery open	Please check if battery wires are connected correctly and battery switch is on.
03	Line phase error	Please check the phase sequence of line input.
04	Bypass phase error	Please check the phase sequence of bypass
05	Battery over charge	Check the battery voltage and then restart the unit.
06	Low battery	Remove all connected loads and charge the battery from utility.
07	Overload warning	Remove some excessive loads based on UPS capacity.
08	EPO active	EPO is activated. Please refer to 4.2.3 to disable it.
09	Over temperature	Remove some excessive loads and check the ventilation.
11	Locked in bypass	If overload occurs 3 times in half an hour, UPS will work in bypass. Please remove some excessive loads.
13	Battery replacement	Please replace battery.
14	Maintain switch is open.	Don't switch on maintenance bypass breaker if it's not in repair.
17	The end of battery backup setting time	Please restart the UPS.
19	Battery test fails	Please restart the UPS.
25	Please pay first	The UPS probation is up and please pay first for continuous working.
26	Battery Active	UPS is working in battery active process.
29	Bypass frequency unstable	Please check the bypass frequency.
30	RTC crystal error	Please restart the UPS.
31	Need to maintain	Please call for maintenance service.

8.2 Fault code

Code	Event	How to do
01	BUS start fail	Restarts the unit. If the problem remains, please call for service.
02	BUS voltage is high	
03	BUS voltage is low	
17	INV soft start fails	
18	INV voltage high	
19	INV voltage low	
20	R phase INV is short circuited	Disconnect the load first. Then restart the unit. If the unit is normal, please check the load.
21	S phase INV is short circuited	
22	T phase INV is short circuited	
23	RS INV is short circuited	
24	ST INV is short circuited	
25	TR INV is short circuited	
29	INV over current	
30	Output over current	
36	INV SCR fault	
37	Wiring fault.	
43	Bypass SCR fault	
65	Over temperature	Shut down the unit. Do NOT restart it until it's cool down.
66	CPU communication fault	Restarts the unit. If the problem remains, please call for service.
67	Overload fault	Remove some excessive loads based on UPS capacity.
72	DSP firmware version incompatible	DSP software version is incompatible with the model. Restart the unit.
82	Battery voltage too high	Disconnect the load first. Then, restart the unit. If the unit is normal, please check the load. If the problem remains, please call for service.
83	R phase INV over current	
84	S phase INV over current	
85	T phase INV over current	
86	R phase output over current	
87	S phase output over current	
88	T phase output over current	
89	R phase INV SCR fault	
90	S phase INV SCR fault	
91	T phase INV SCR fault	
92	R phase bypass SCR fault	
93	S phase bypass SCR fault	
94	T phase bypass SCR fault	

9. Specification

Table1: Line input

Model	10K	15K	20K	30K	40K	60K	80K	100K	120K	160K	200K
Capacity	10KVA	15KVA	20KVA	30KVA	40KVA	60KVA	80KVA	100KVA	120KVA	160K	200KVA
	8KW	12KW	16KW	24KW	32KW	48KW	64KW	80KW	96KW	128KW	160KW
Rated voltage	3 x 380/400V (3Ph + N)										
Rated frequency	50Hz/60Hz										
Voltage range	165V~280V (Ph-N) / 285V~485V (Ph-Ph)										
Frequency range	46Hz~54Hz @50Hz; 56Hz~64Hz @60Hz										
Rated input current / per phase	20A	30A	38A	56A	73A	106A	140A	160A	200A	277A	300A

Table 2: Battery

Model	10K	15K	20K	30K	40K	60K	80K	100K	120K	160K	200K
Battery numbers	29/30/31/32 PCS (12V in series)										
Rated voltage	384VDC										
Charging current	Default 10A, *Maximum=Capacity (KW)/Battery Voltage(real-time).			Default 10A Maximum 40A, 5A @ full load							
Floating voltage	13.5VDC /per unit (12V)										
High cut off point	14.5VDC / per unit (12V)										

Table 3: Inverter output

Model	10K	15K	20K	30K	40K	60K	80K	100K	120K	160K	200K
Waveform	Sinusoidal wave										
Rated voltage	3 x 380/400V (3Ph + N)										
Tolerance	±1% (Balanced)										
Rated frequency	50/60 Hz ±1 %										
THDV	R load<2%; RCD load<5%										
Overload capacity	110%~150% 10min~60s; >160% 200ms										
Efficiency	>90%										

Table 4: Bypass

Model	10K	15K	20K	30K	40K	60K	80K	100K	120K	160K	200K
Rated voltage	3 x 380/400V (3Ph + N)										
Rated frequency	50Hz/60Hz										
Voltage range	176V~264V (Ph-N) / 304V~456V (Ph-Ph)										
Frequenc y range	46Hz~54Hz @50Hz; 56Hz~64Hz @60Hz										
Transfer time	Synchronization: 0ms										
Overload capacity	150% ~ 180% 1h~30s; 180% ~ >200% 30s~200ms										

Table 5: ECO Bypass (Default disable)

Model	10K	15K	20K	30K	40K	60K	80K	100K	120K	160K	200K
Rated voltage	3 x 380/400V (3Ph + N)										
Rated frequency	50Hz/60Hz										
Voltage range	176V~264V (Ph-N) / 304V~456V (Ph-Ph)										
Frequency range	46Hz~54Hz @50Hz; 56Hz~64Hz @60Hz										

Transfer time	<10ms

Table 6: Environment

Model	10K	15K	20K	30K	40K	60K	80K	100K	120K	160K	200K
Working temperature range	0°C ~ 55°C										
Storage temperature range	-15ºC ~ 60ºC										
Altitude	0 ~ 1000m (Please refer to part 3.1 when over 1000m)										
Humidity	5% ~ 95% no condensing										
IP degree	IP21										
Cooling	Forced air cooling										
Communi-cation	RS232, USB, RS485, intelligent slot										

Table 7: Mechanics

Model	10K	15K	20K	30K	40K	60K	80K	100K	120K	160K	200K
Depth (mm)	656			656	821		975		975	1051	1051
Width (mm)	405			405	432		554		554	705	705
Height (mm)	817			941	1159		1286		1326	1646	1646
Weight (kg)	118	120	145	193	278	365	471	573	650	760	790

10. Parallel Installation Guide

10.1 Introduction

- The UPS can be paralleled in 3+1 redundancy or 4 units as an expansion.
- **N+1 redundancy** is a form of resilience that ensures system availability in the event of one UPS failure. During normal operations, the load is shared equally across all UPSs, which behaves as if they were a single UPS device. If a single UPS fails or needs to be taken offline for service, the system will continue running without interruption. The UPS modules should be sized so that the total anticipated load can be carried by N units.

  If the total power of system is more than N units, the system will continue running but with warning coming out.
- **Expansion** is activated when the total power of system is more than N units. In this case, the system continues running but with warning ringing out.

  Under this situation, if a single UPS fails or needs to be taken offline for service, the system will shut down for overload.
- **Host and slaves** are generated randomly. Usually the first one who starts up will be the host.

  If one slave device fails or needs to be taken offline, the host and other slaves keep running. If the host fails or needs to be taken offline, the new host will come out from slaves by competing with each other.

10.2 Parallel Kit Overview

10.2.1 Package Contents

If you purchase a parallel UPS, you should find the following items.

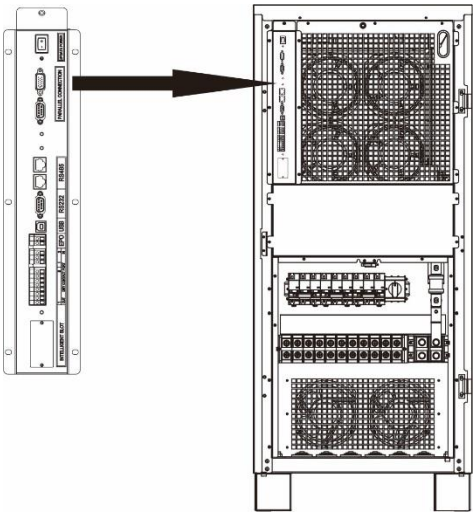

Please make sure parallel communication port is already installed in the UPS as shown in the chart.

Parallel communication cable

10.2.2 Installation

When installing multiple units, please follow below chart.

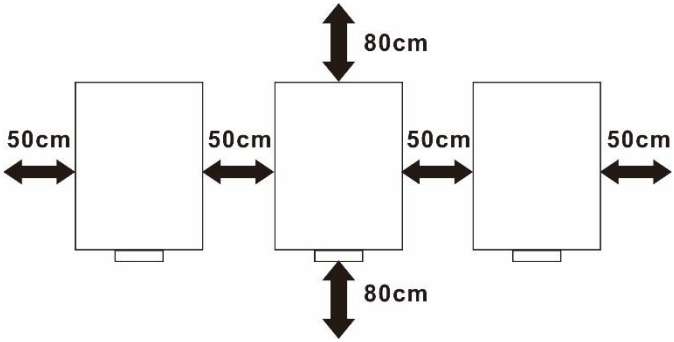

NOTE: For proper air circulation to dissipate heat, allow a clearance of approx. 20 cm to the side and approx. 80 cm front and back the unit.

10.2.3 Wiring Connection

Two UPSs in parallel:

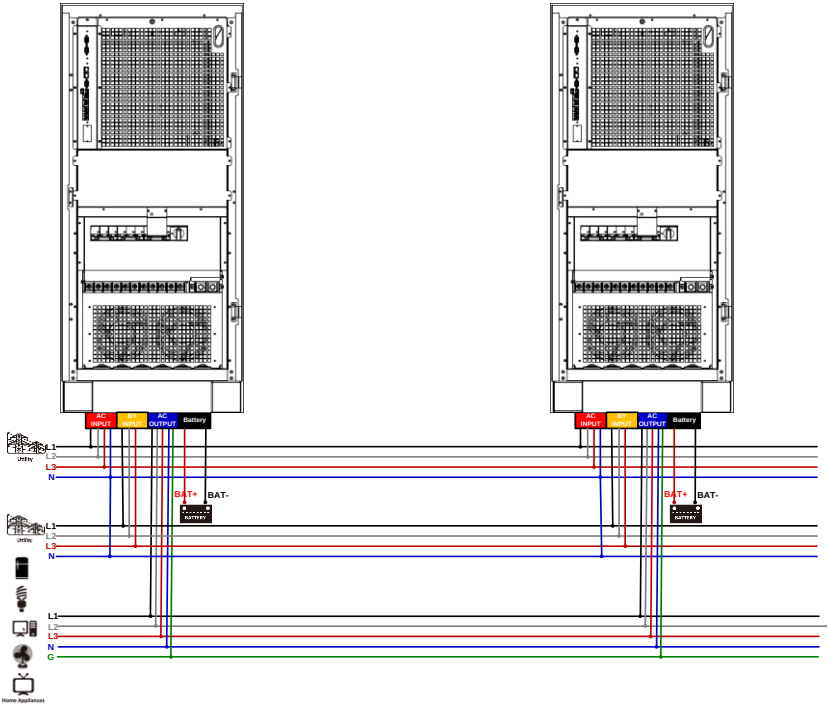

Communication Connection

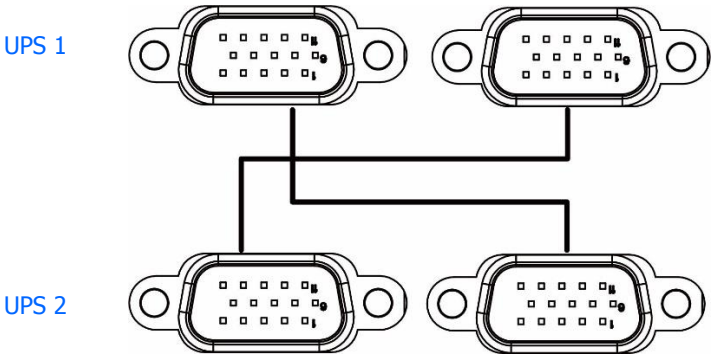

Three UPSs in parallel:

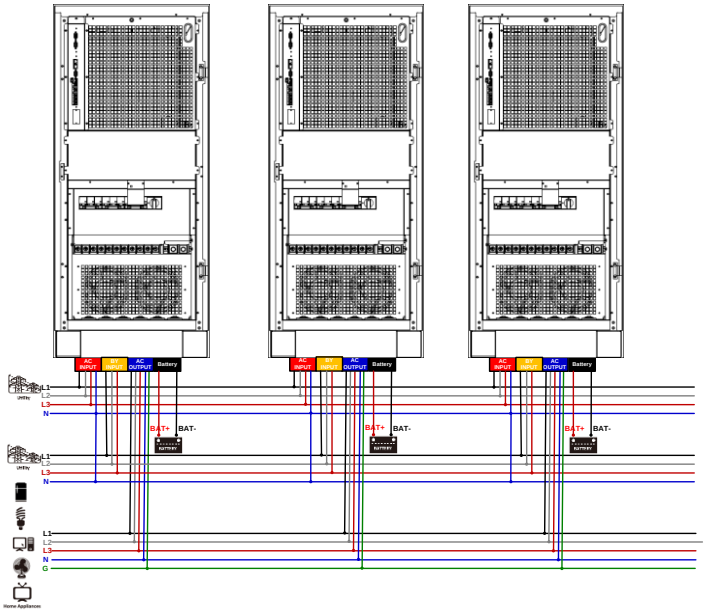

Communication Connection

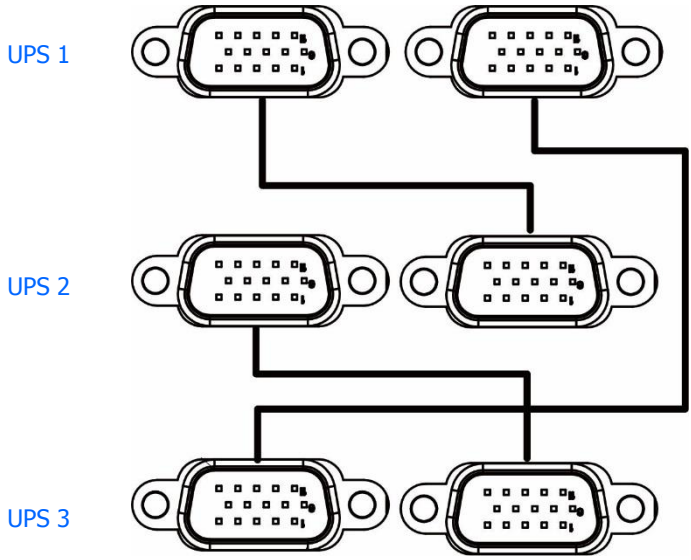

Please apply the same above wiring connection to finish four UPSs in parallel.

Recommended specification of battery breaker for each UPS:

Model	One unit
10~20KVA	80A/500VDC
30KVA	100A/500VDC
40KVA	120A/500VDC
60KVA	160A/500VDC
80KVA	200A/500VDC
100KVA	240A/500VDC
120KVA	280A/500VDC
160KVA	400A/500VDC
200KVA	500A/500VDC

Note 1: Please be sure **NOT** to share the same battery pack in parallel system.

Note 2: It's recommended to use the same specification for all connected batteries.

10.3 Setting and LCD display

This UPS is default set up as single operation from factory. However, it's able to configure as parallel model by setting LCD program. Please contact service center to get service password and technical support. You may find parallel or single model of the UPS from LCD screen as below:

LCD Screen	Description
LF UPS 17:30 2014/11/05 TYPE: PARALLEL Event show… Utility 1/3	**TYPE:** Show the UPS is single or parallel.

10.4 Specification

Model	10K	15K	20K	30K	40K	60K	80K	100K	120K	160K	200K
Power range	10KVA 8KW	15KVA 12KW	20KVA 16KW	30KVA 24KW	40KVA 32KW	60KVA 48KW	80KVA 64KW	100KVA 80KW	120KVA 96KW	160KVA 128KW	200KVA 160KW
Max parallel number	4										
Output Power for Parallel System											
VA	40K	60K	80K	120K	160K	240K	320K	400K	480K	640K	800KVA
W	32K	48K	64K	96K	128K	192K	256K	320K	384K	512K	640KW
Circulation Current under No Load	<3A				<5A						
Power Unbalance Ratio	<5% @ 100% Load										
Parallel communication	CAN										
Transfer time in parallel mode	0ms										

10.5 Trouble shooting

10.5.1 Warning code

Code	Event	How to do
22	Parallel line lost	Check if sharing cables are connected well and restart the UPS.
23	Bypass wiring difference	Check if the Bypass phase sequence and voltage is correct or not. **WARNING:** If bypass wiring is different and when fault occurs on all parallel UPSs, it will cause power interruption.
24	N+1 redundancy lost	Pay attention to UPS status while working in Expansion mode.

10.5.2 Fault code

Code	Event	How to do
38	Switch line fault	1. Update all UPS firmware to the same version. 2. After updating, if the problem still remains, please contact your local dealer.
39	Parallel line loss	
40	CAN comm. fault	
41	Host line loss	
42	Output voltage difference	Restart the UPS. If the problem still remains, please contact your local dealer.
46	Parallel version difference	1. Update all UPS firmware to the same version. 2. After updating, if the problem still remains, please contact your local dealer.
47	SYNC line Loss	1. Check if communication cables are connected well and restart the UPS. 2. If the problem remains, please contact your local dealer.
49	Parallel setting difference	Check if the parameter setting of all UPSs are the same. If not, please update them with same settings.

Disclaimer

We assumes no responsibility or liability for loss or damages, whether direct, indirect, consequential or incidental, which might arise out of the use of such information. The use of any such information will be entirely at the user's risk. Information in this manual is subject to change without notice. We make no commitment to update or keep current the information in this manual. If you find information in this manual that is incorrect, misleading, or incomplete, we would appreciate your comments and suggestions.